TECHNICAL MANUALS

K3

INTRODUCTION

You must read these technical manuals carefully before riding the motorcycle and make your children understand the precautions and safety measures that must be taken.

DOWNLOADS

QR codes for downloading the manuals corresponding to each action.

1.- ASSEMBLY

2.- CHARGER

3.- BATTERY

4.- USER MANUAL

5.- PARTS-BOOK

Before using the K3 motorcycle, you must make sure that you have understood everything written in this manual, paying particular attention to the warnings and safety section.

This manual must always be carried with the motorcycle and must be transferred in any change of ownership.

Before using the motorcycle, you must read this manual carefully and keep it for future reference.
If you have any questions, you can go to your NEUTRA point of sale or you can contact the official distributor on our website.
You can also write to us at our email and our staff will respond as soon as possible.
This manual contains important safety, operation, assembly and preparation information for the correct use of the motorcycle.
The motorcycle is not ready for immediate use, it arrives partially assembled.
You must follow the assembly and preparation procedures indicated in this manual for good motorcycle safety.
You must also take into account the safety information explicit in this manual, to avoid personal injury when assembling and maintaining it.
Where to find safety information:
Safety labels on the motorcycle.
Warning symbols together with a word and instructions or information that you should take into account, which you can find in this manual.

DANGER:
A hazardous situation that may result in death or serious injury.

WARNING:
A hazardous situation that may result in death or serious injury.

CAUTION:
Information on practices that do not involve risk of injury. It is used to prevent damage to the motorcycle or the environment.

This manual also includes the following information:

NOTICE:
Information to assist you in the operation or maintenance of your motorcycle.

This publication contains the latest motorcycle information available prior to publication.
NEUTRA reserves the right to make changes at any time without notice and without incurring any obligation.

NEUTRA

ASSEMBLY MANUAL AND PREPARATION K3

Ver.1.2 DEC-25

TABLE OF CONTENTS

1 DANGERS AND WARNINGS 3
2 ASSEMBLY INSTRUCTIONS 5
3 CHARGING THE BATTERY 10
4 MOTORCYCLE STORAGE 14
5 PREPARATION 15
6 SPARE PARTS 22
7 TROUBLESHOOTING 22

1 DANGERS AND WARNINGS

1.1 BURN HAZARD

Some motorcycle components can become very hot.

Below is an image (Fig. 1) where the components that can become hotter during use are highlighted in blue:

- Engine.
- Controller.
- Front and rear brakes.
- Charger (when charging the battery).

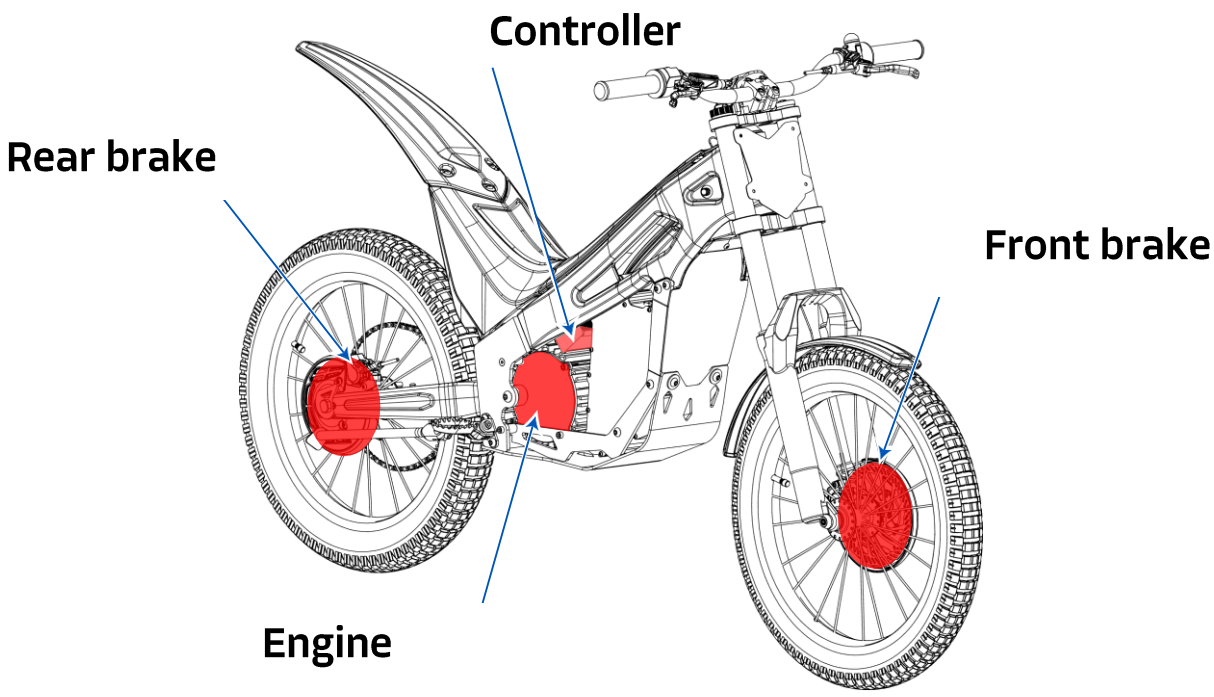

Fig. 1

WARNING

Do not touch any of the components mentioned above until they have cooled down completely.

1.2 FIRE HAZARD

If the battery is in perfect condition, there is no risk of fire.

DANGER

The battery contained in the electric motorcycle poses a fire hazard. If your motorcycle catches fire, you must inform the fire service that a fire has occurred in a motorcycle with lithium-ion batteries.

Never open the battery unit.

The battery is a large energy storage unit capable of causing serious damage to people or facilities due to misuse or manipulation of it.

Battery repairs can only be carried out by qualified personnel authorized in writing by NEUTRA.

NEUTRA is exempt from and will not be held responsible for any damage caused by the battery to people, equipment or installations due to improper handling of the battery by unauthorized personnel, or due to impacts or overloads.

Below we can see several safety rules regarding the battery.

DANGER

The interior of the equipment cannot be accessed, never open the battery system. Any attempt to open it will void the warranty. There is a high risk of accident if the opening is carried out by unauthorized personnel.

The installation, handling and maintenance of the battery must be carried out by qualified personnel.

DO NOT charge the battery if the ignition switch is ON. Do not expose to fire.

Avoid exposing the battery to temperatures above 40ºC. Never open the battery system or any of its components.

Prevent the entry of any liquid and never immerse the battery in any liquid.

Do not hit or drop the battery.

In case of emergency, call the emergency services and inform them that it is a Lithium battery.

The battery must be kept away from children during the charging process.

To avoid electrical accidents, unplug the battery when the motorcycle is not operating and after charging.

WARNING

The battery must be charged in conditions of humidity below 75% and a temperature between 0ºC and 40ºC.

CAUTION

It is forbidden to use any charger that is NOT supplied by the manufacturer.

It is forbidden to use any charger that is NOT supplied by the manufacturer. You should find out more about the correct use and precautions for the battery. For this, refer to the manual “K3/KOUNTRY3 BATTERY MANUAL - 2025” found on our website.

1.3 WARNINGS ON ASSEMBLY AND HANDLING

Follow the instructions in this manual at all times to perform correct maintenance on the motorcycle.

CAUTION

Use the oils and other products indicated in this manual.

WARNING

Use the specified tightening torques.

For the safety of the rider, use only original NEUTRA spare parts and accessories. NEUTRA is not responsible for damage resulting from the use of other products not indicated in this manual.

WARNING

No unauthorized changes, modifications or manipulations may be made to the motorcycle. If this is done, the safety of the motorcycle cannot be guaranteed, and the warranty will be voided.
The motorcycle must be switched off before any manipulation.
No manipulations must be made to the motorcycle until it has cooled down, due to the risk of burns.

DANGER

There is a risk of electric shock when working under electrical voltage; thus, specific training and tools are required to work with electrical systems.
For any maintenance or manipulation, remove the battery and wait 5 minutes.
This is an important precaution to consider due to the risk of electric shock. Under no circumstances should any electrical or electronic components of the motorcycle be opened.

2 ASSEMBLY INSTRUCTIONS

WARNING

To avoid damage, always wear protective gloves, boots and eye protection googles (Fig. 2) when unpacking, assembling or servicing the motorcycle.



Fig. 2

The motorcycle is delivered in a box. It is not ready for immediate use.
Follow the instructions on this manual prepare the motorcycle for riding (Fig. 3).

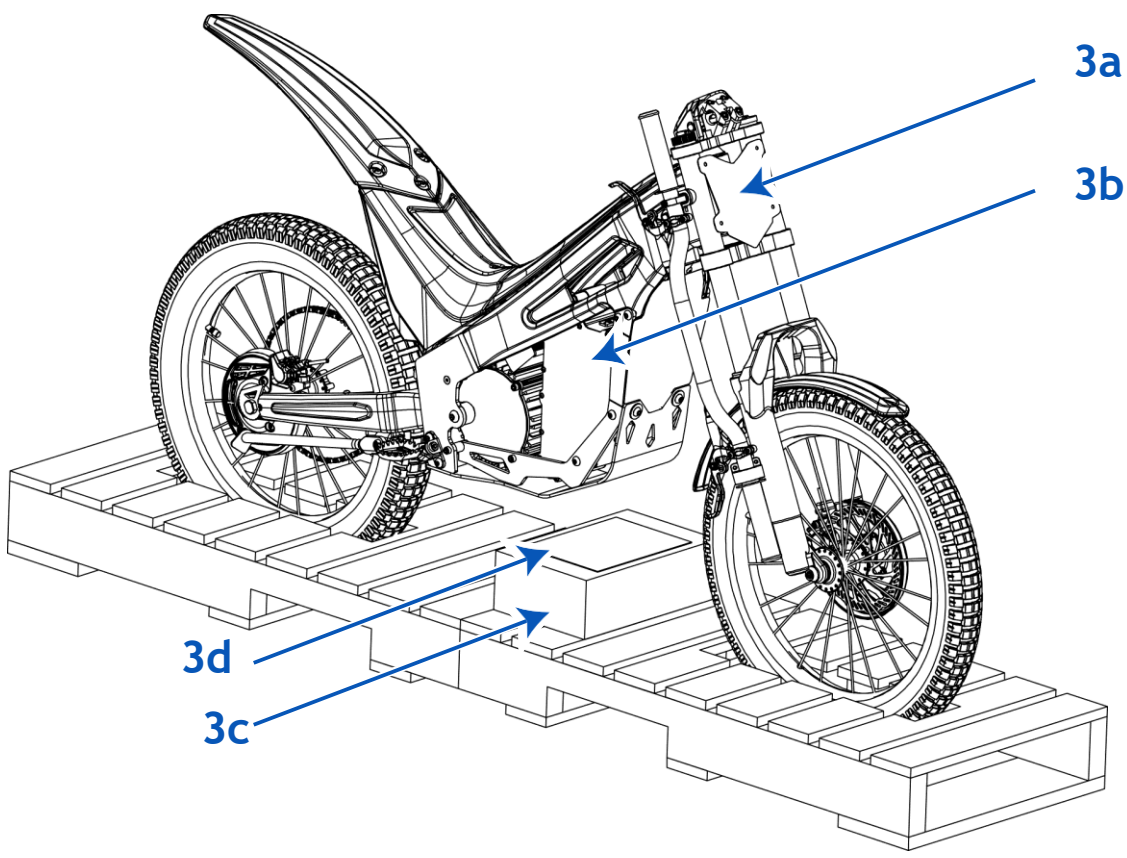

Fig. 3 Condition of the motorcycle when unpacked

Checking the contents:

- NEUTRAL K3 motorcycle (Fig. 3a) and LI-ION battery (Fig. 3b).
- Box with charger and mains wiring (Fig. 3c).
- Owner's manual for the motorcycle and battery (Fig. 3d).
- CE conformity certification.

DANGER

Failure to properly assemble and adjust the motorcycle before use can lead to an accident, causing death, injury and/or material damage.

2.1 UNPACKING THE MOTORCYCLE

1. Carefully cut all the tapes or ties that close the box.

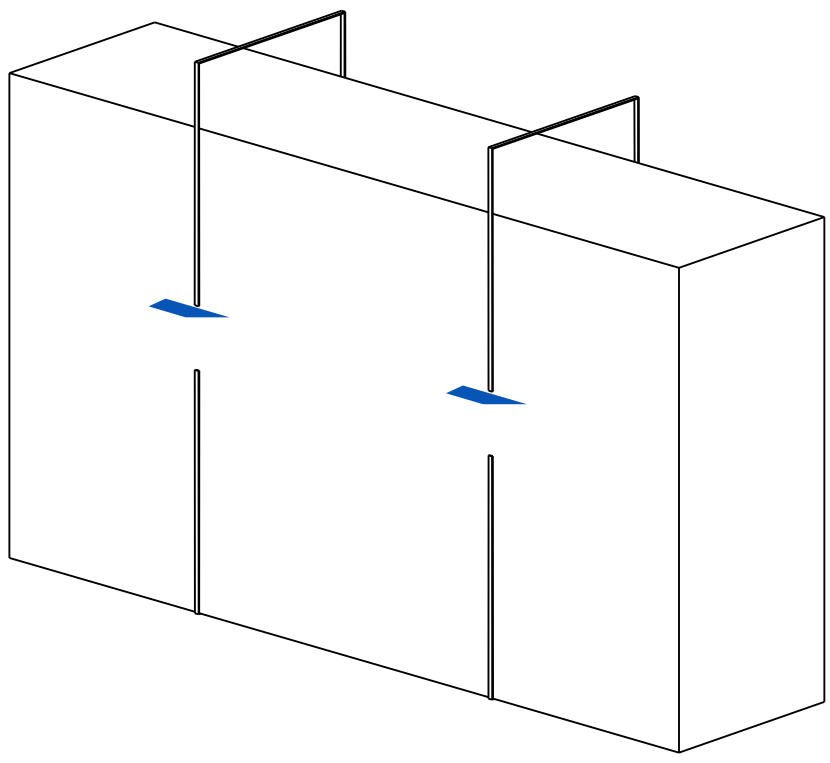

Fig. 4

2. Remove the outer packaging lining.

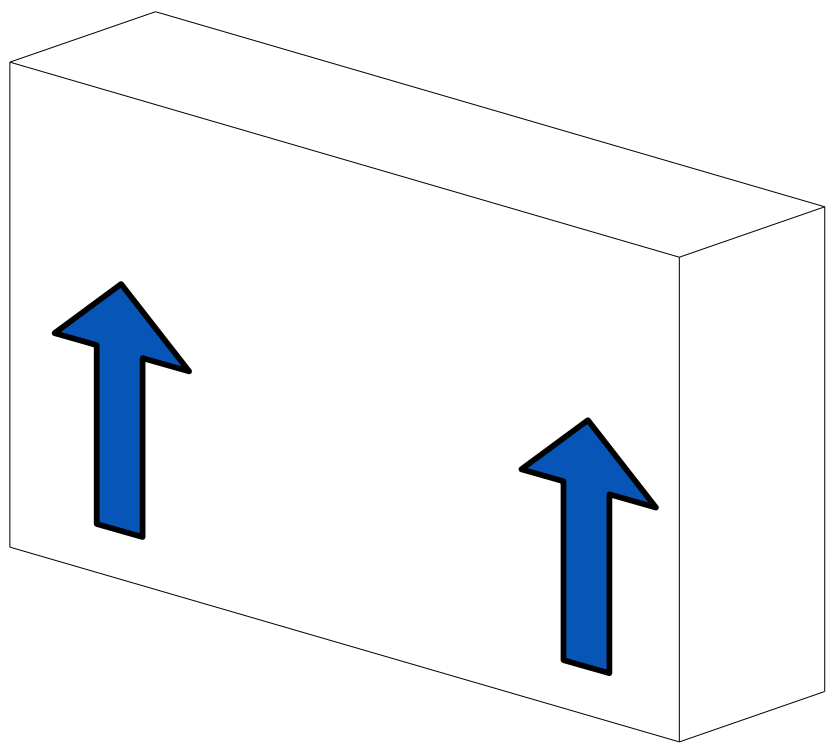

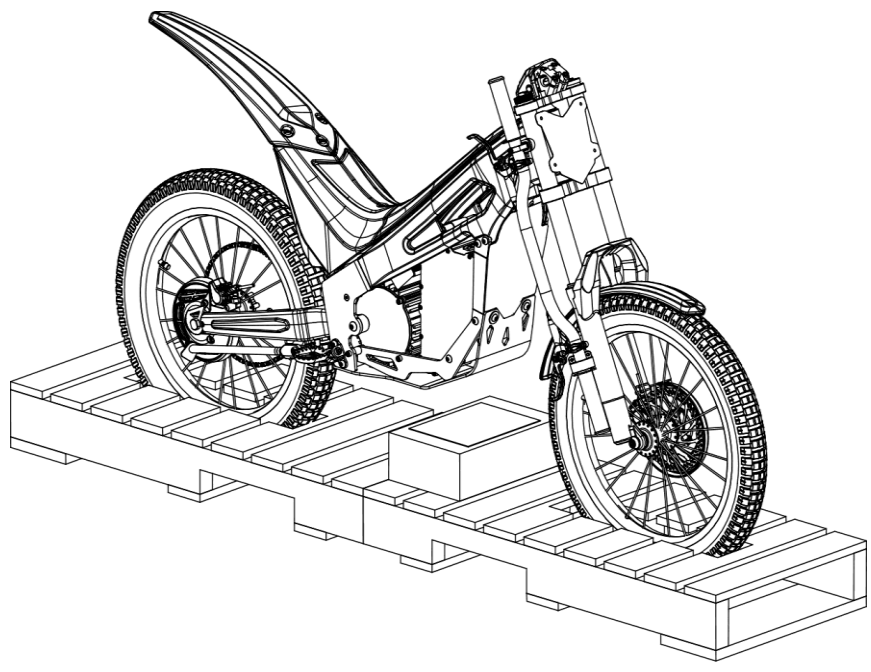

Fig. 5

3. Remove the charger box and the corresponding manual sheet for the motorcycle and battery, located on the bottom of the motorcycle (Fig. 3c and Fig. 3d on page 5).

4. Remove the 4 M6 Allen head screws from the handlebar turret.

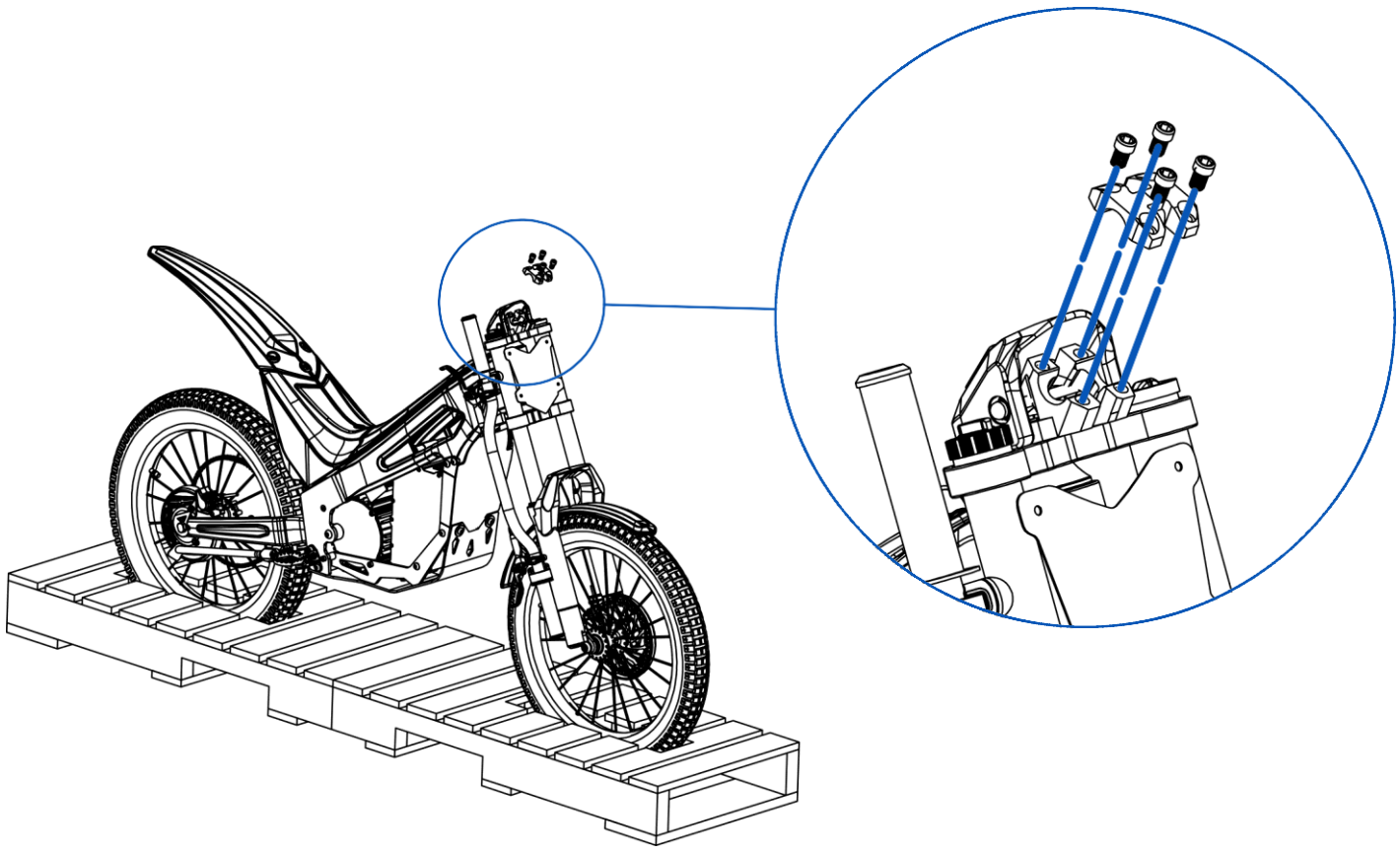

Fig. 6

Carefully remove the handlebar, located vertically on the side of the front fork.
During this operation, avoid tensioning or pulling on the throttle cable, the safety switch cable ("MAN OVERBOARD") and the brake hoses.

5. Use the same screws to secure the handlebar, making sure to apply the specified tightening torque (1 Kgf.m.). Check that the cables and hoses follow their proper route, without twists or obstructions. Please refer to the assembly manual (page 9, sections 9, 10 and 11) for correct assembly.

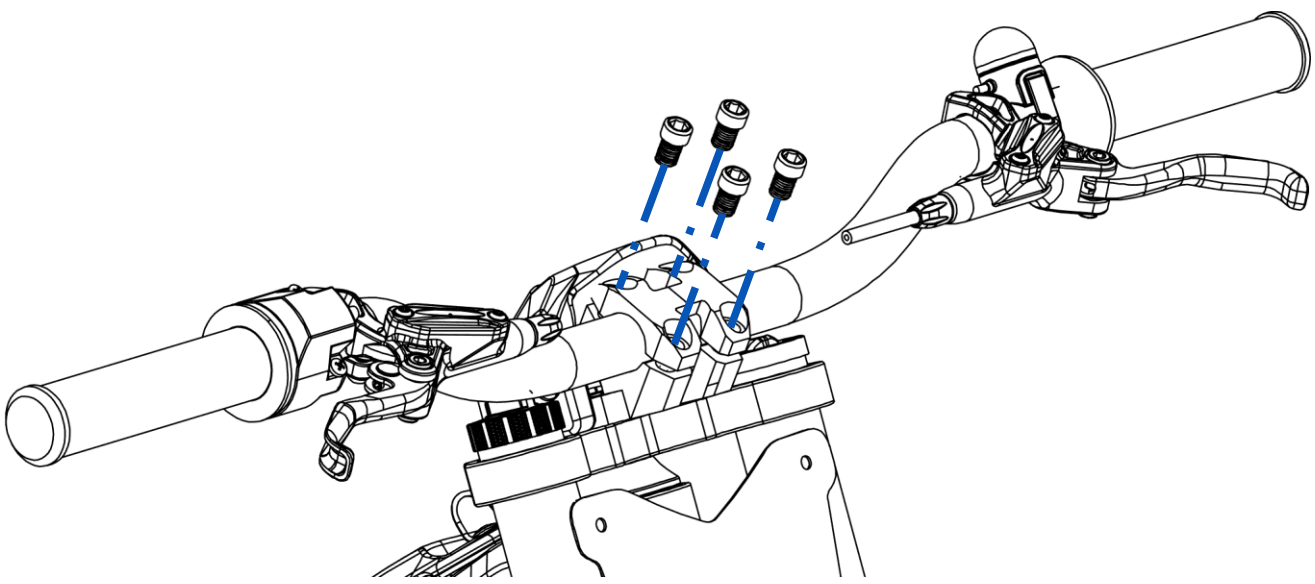

Fig. 7

6. Remove the lower pallet to release the motorcycle.

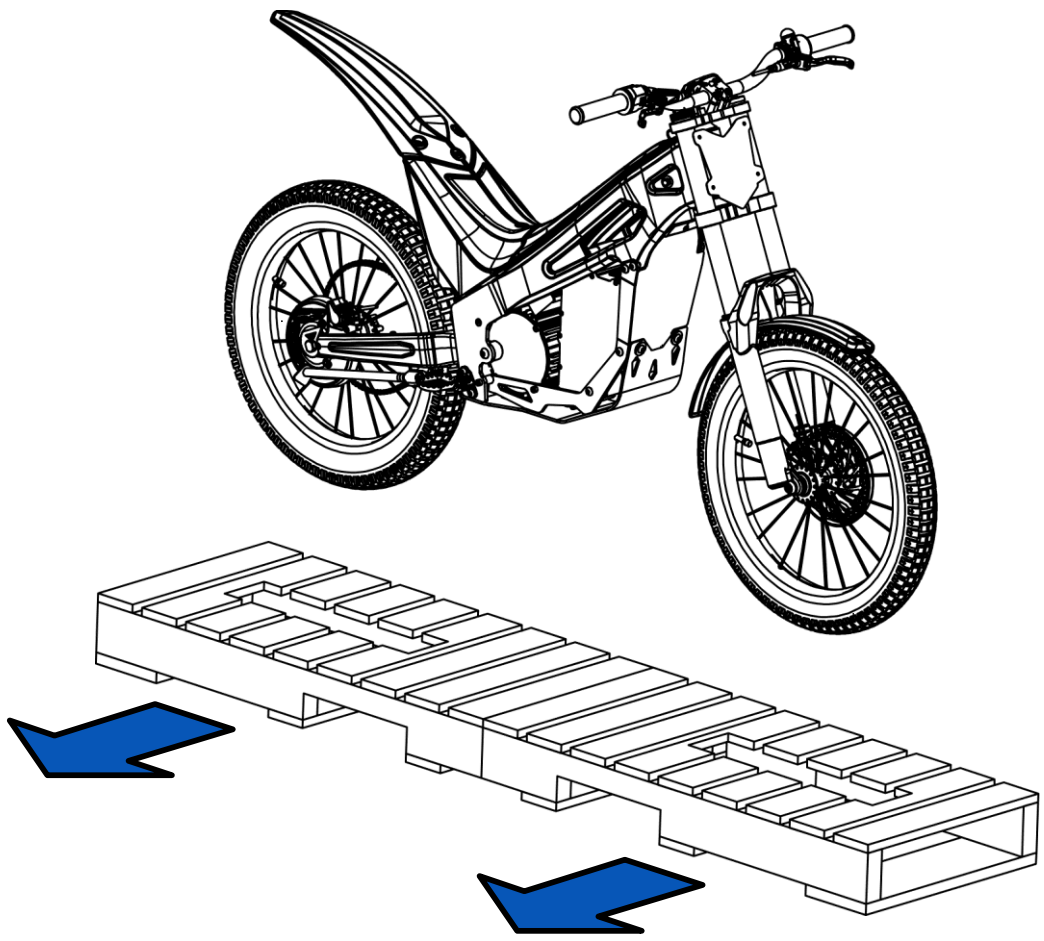

Fig. 8

7. The motorcycle must be placed in an upright position and the folding side stand must be lowered (Fig. 9a), to keep the motorcycle fixed and prevent it from falling (Fig. 9b). You must ensure that the motorcycle is placed on a flat surface.
   Position the motorcycle stand as shown in the following image.

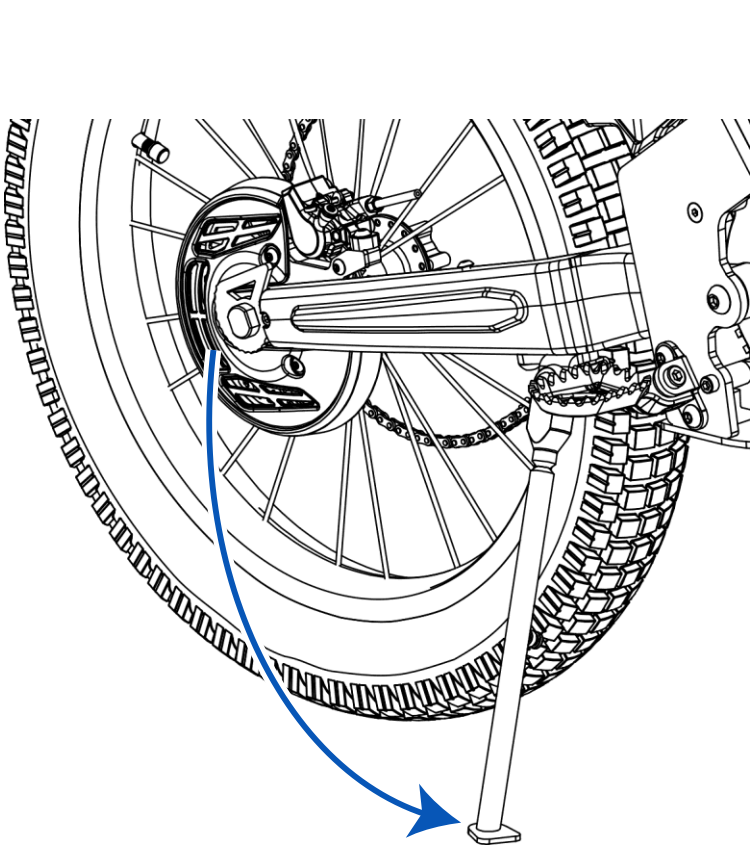

Fig. 4a

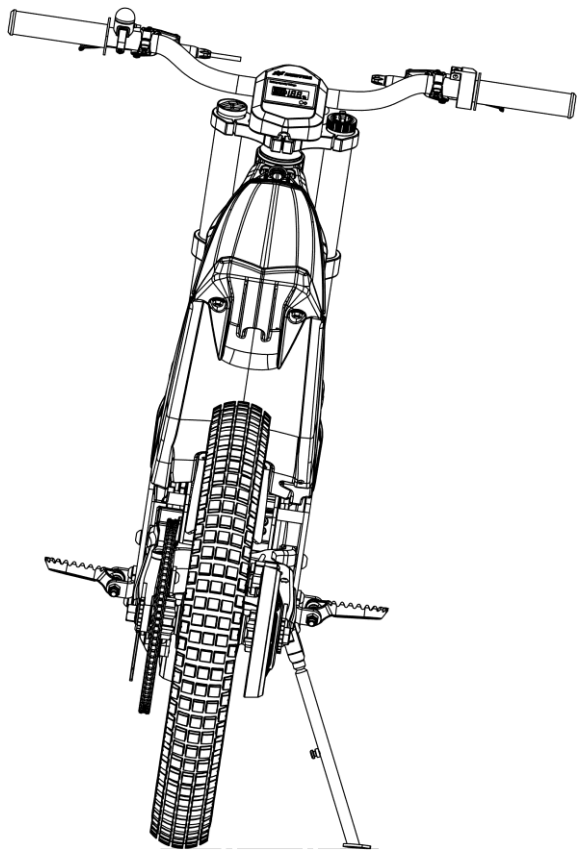

Fig. 4b

8. Dispose of the packaging responsibly, prioritizing recycling according to local waste management regulations.

9. Next, the handlebar must be adjusted to the specific angle between 0º and 30º (Fig. 10), with which the rider feels comfortable. Always in contact with the upper plate. And secure it with the same four M6 Allen screws (Fig. 7) above, with a torque of 1 Kgf.m.

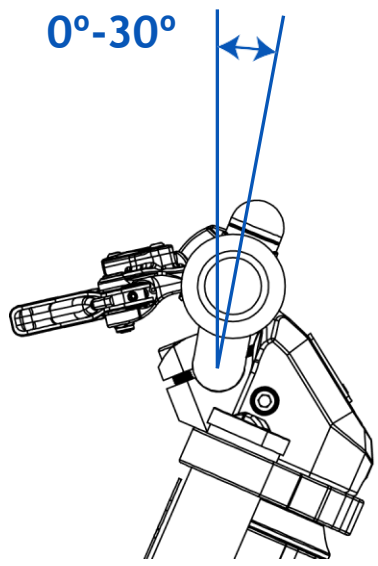

Fig. 10

10. You must check that the handlebar cables are in a proper position.

> **⚠ WARNING**
>
> The brake lines must NOT interfere or be taut throughout the entire turn of the handlebar on both sides.

11. You must check that the brake levers are located between 0º and 10º as we see in the following image.

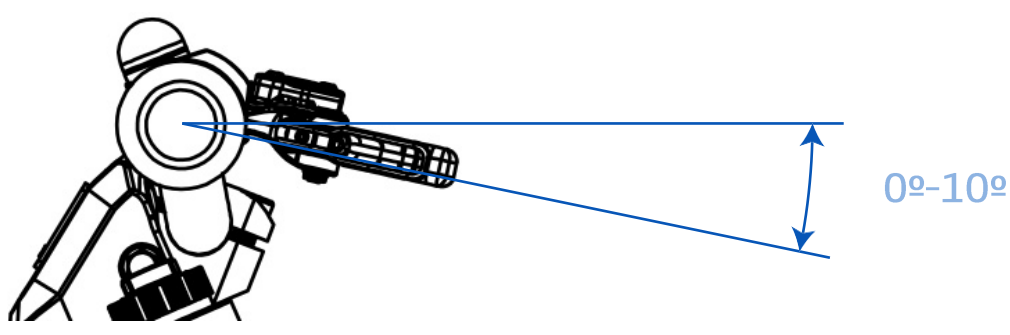

Fig. 11

12. Adjust the pressure of the front and rear tires.

FRONT TYRE PRESSURE 0,8 Kgf/cm^2.

REAR TYRE PRESSURE 0,8 Kgf/cm^2.

13. The battery of the motorcycle is delivered with a charge level below 30% of its maximum capacity and with the battery disconnected.

3 CHARGING THE BATTERY

The following components are required to charge the KOUNTRY3 battery:

Battery (Fig. 12).

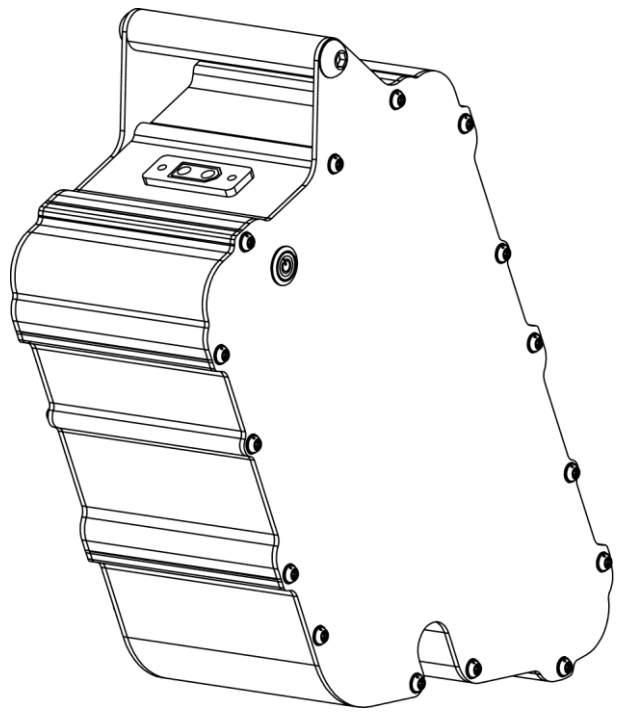

Fig. 12

Charger (Fig. 13).

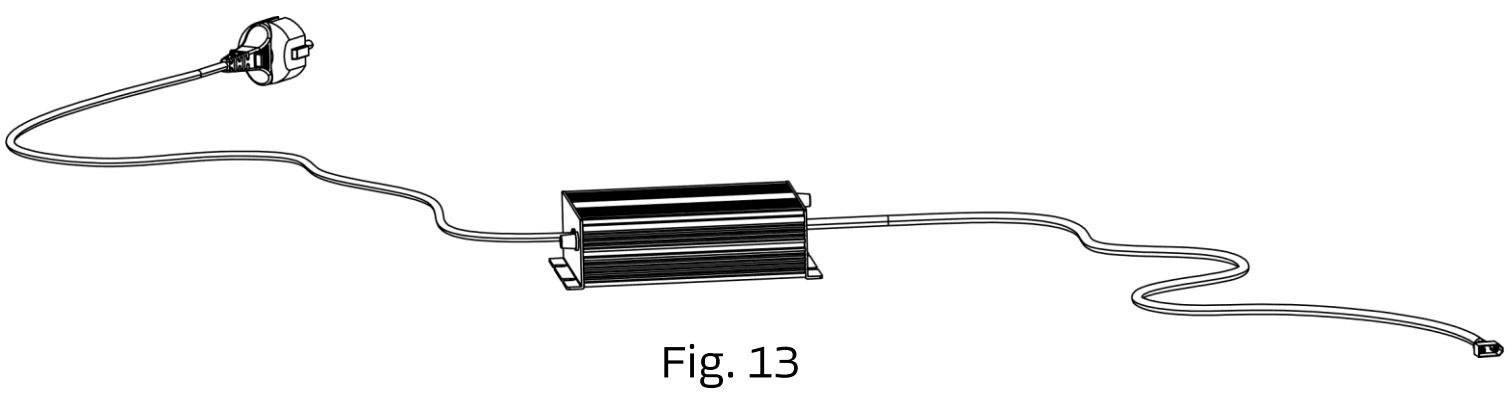

Fig. 13

You must follow the instructions below when using the charger to charge the battery.

NOTICE

FULLY CHARGE THE BATTERY BEFORE USING THE MOTORCYCLE.

You must plug the charger cable into the domestic plug (Fig. 14a).
At this point, LED 1 on the charger will be red and LED 2 will be green (Fig. 15).
Next, you must connect the charger's cable with its two-pin connection to the battery. You must correctly position the two-pin plug (Fig. 14b) by aligning it with the slot and insert it.

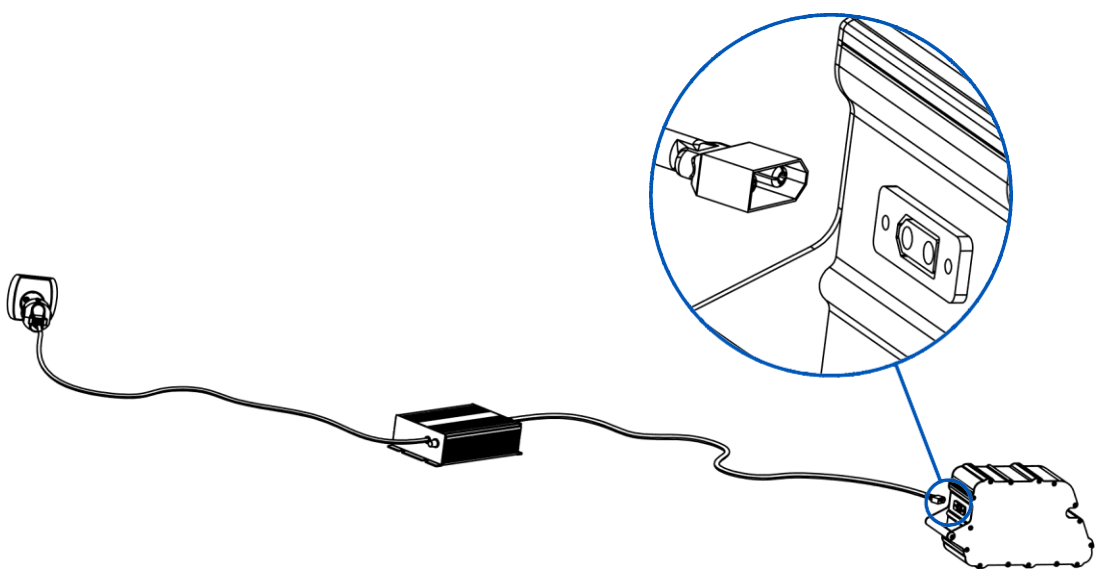

Fig. 14a and 14b

You will notice that both LEDs on the battery charger will be red, this means that the battery is charging correctly.

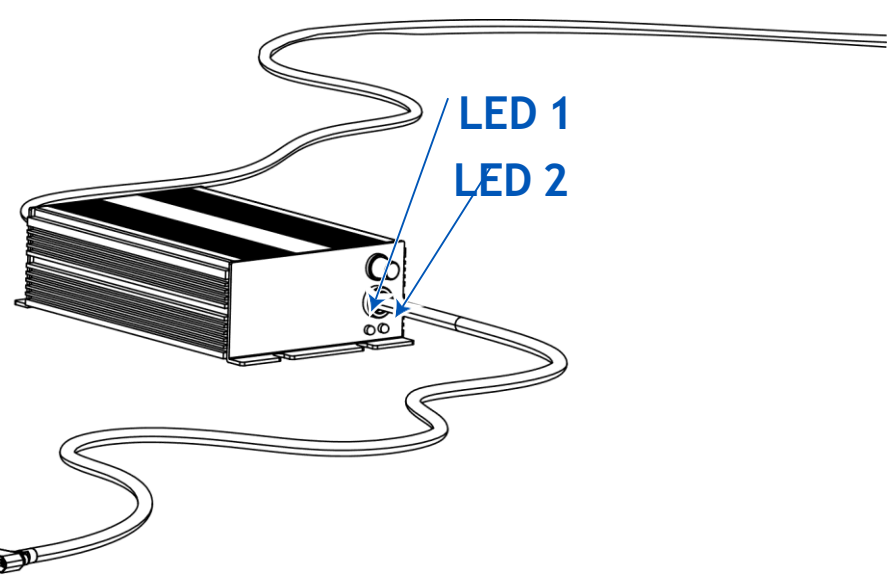

Fig. 15

The battery will be fully charged in approximately 2 hours. You will know that the battery is fully charged when LED 1 on the charger is red and LED 2 is green.
Below is a table indicating the colours of the two LEDs on the battery charger according to the different states:

	LED 1	LED 2
CHARGER ON	●	●
BATTERY CHARGING	●	●
BATTERY CHARGED	●	●

Once the battery is fully charged, you must unplug the charger from the household power socket and then disconnect the charger from the battery.

CAUTION

You should always disconnect the cables by the rigid part of the connectors, you should never disconnect them from the charger by pulling on the cables, or should you connect them with excessive force.
It is forbidden to use any charger that is NOT supplied by the manufacturer.

To see the correct use of the battery and its specifications in more detail, refer to the downloadable “K3/KOUNTRY3 - 2025 BATTERY MANUAL”.

WARNING

If signs of deterioration or any type of imperfection are observed in the battery or the charging elements, these must be replaced.

To do so, go to your NEUTRA point of sale or you can contact the official distributor on our website. You can also write to us at our email and our staff will respond as soon as possible.
Once the battery is charged, you must check that the motorcycle is connected correctly.
First, you must connect the overboard switch, located on the right handlebar, and then you must press the starter button to the “ON” position.

WARNING

The motorcycle contains a safety device called the OVERBOARD SWITCH, which turns off the motorcycle if it is disconnected from the motorcycle. The function of this element is to stop the motorcycle engine in the event of a fall and thus prevent more serious injuries to the rider.
Before each use, you must ensure that the MAN OVERBOARD is correctly connected to the motorcycle and above all you must check that the device is properly fixed on the rider's left wrist.

In the following image (Fig. 16) we can see the location of this device.

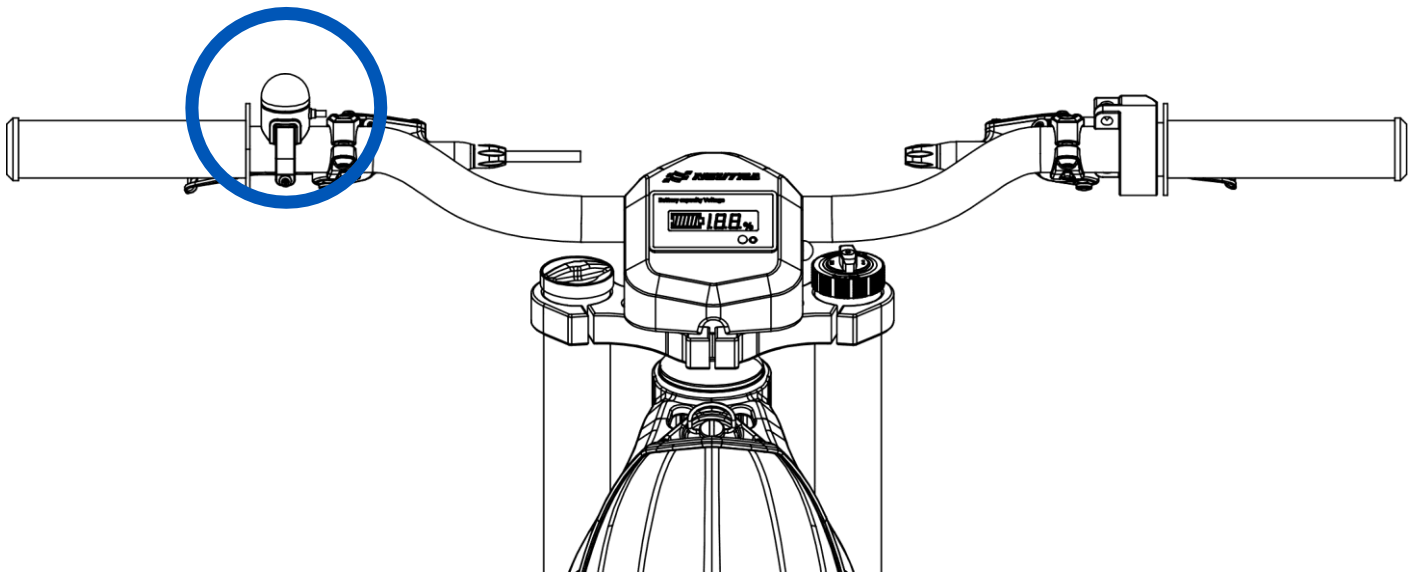

Fig. 16

Check the motorcycle's start by putting the ignition switch in the “ON” position (Fig. 17). This button is located on the front of the chassis in the part closest to the steering stem, on the left side. We can see it in the following image:

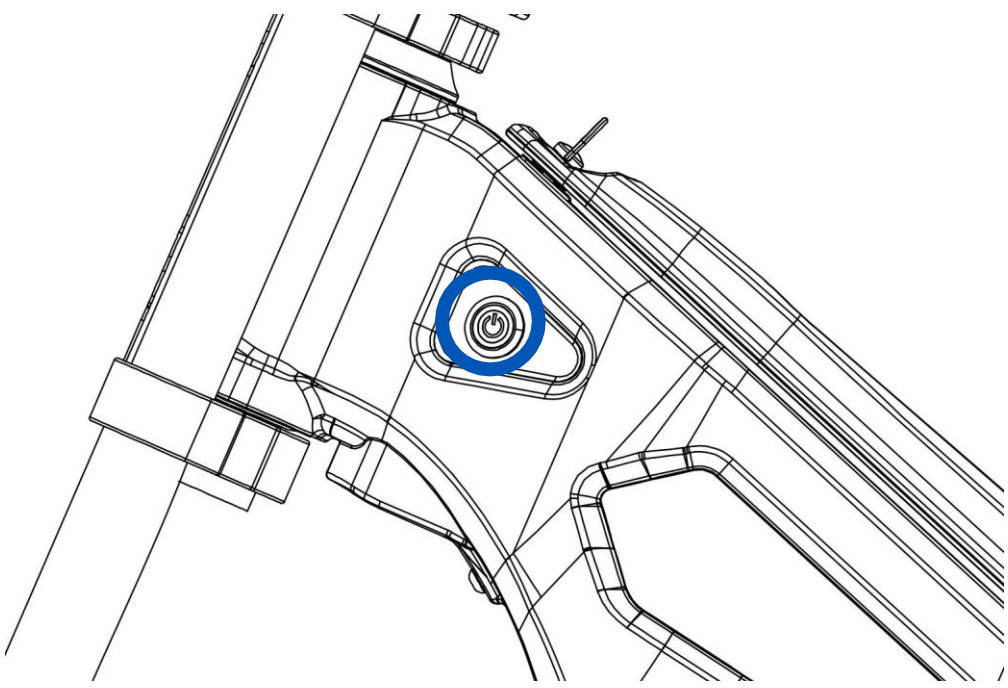

Fig. 17

To see the correct use of the ON/OFF control and its specifications in more detail, refer to the document “USER MANUAL K3 - 2025” that can be downloaded from Neutra webpage. You must take into account what is detailed in this section before carrying out any operation on the motorcycle.

4 MOTORCYCLE STORAGE

You must consider the aspects mentioned below, in order to store the motorcycle correctly for a long period of time.

1- Remove the battery from the motorcycle as explained in section 2, specifically in the sub-section “Charging the battery” (optional).
2- Clean the motorcycle thoroughly and wait for it to dry completely before storing it and apply a protection product for corrosion and humidity. You must follow the instructions detailed in section 5, specifically in the sub-section “Cleaning the motorcycle”.
3- Lubricate the transmission system and all moving parts.
4- Keep the motorcycle in an upright position, for which it is recommended to use a central stand, which keeps the wheels in the air.
5- Cover it with a cover to avoid dust.

CAUTION

- Store the motorcycle in a clean, dry and well-ventilated place.
- Avoid direct sunlight.
- Keep away from heat sources.
- The temperature of the place must remain between 15ºC and 30ºC.
- Humidity must be between 30% and 75%.

CAUTION

- Periodically check that all the motorcycle components are working correctly.
- The battery charge level must be between 40% and 60%. You should periodically check this level. If the charge is lower, you must connect the charger until the indicated level is reached. Otherwise, when the charge is higher, you must operate the motorcycle until the indicated battery level is reached.
- One to three complete battery cycles should be performed every 3 months to maintain proper performance. Once the previous cycles have been carried out, if you intend to continue storing the motorcycle for a long period of time, it must be returned to the storage conditions mentioned above.

You should take into account the following aspects to put the motorcycle into operation after long-term storage:

Check the tire pressure.

Carry out general lubrication.

Charge the battery up to 100% of its charge and finally, insert and connect the battery to the motorcycle, if we have removed it.

5 PREPARATION

Preparation operations can be easily carried out with the help of this manual.

5.1 TYRES AND WHEELS

It is very important to maintain the tyre pressure indicated in this manual. You should always check these pressures with cold tyres.

FRONT TYRE PRESSURE 0,8 Kgf/cm^2.

REAR TYRE PRESSURE 0,8 Kgf/cm^2.

⚠ WARNING

The tyres must be in good condition. Some signs that can help you detect when a tyre is in poor condition:
Cracks in the casing.
Deformation of the casing.

⚠ WARNING

The tyres and wheels must always be the same size and type as specified by NEUTRA.
You cannot make changes to the tyre type, as these changes may affect the safety of the motorcycle.

To do so, go to your NEUTRA point of sale or you can contact the official distributor on our website.
You can also write to us at our email address and our staff will respond as soon as possible.

5.2 TRANSMISSION SYSTEM

You must check the correct operation of the transmission system.

- Check that the sprocket and crown teeth are in good condition.
- Check the chain slack, so that the chain has a play as indicated in this manual, 10 mm (Fig. 18). To check this, you must turn the wheel and check the slack several times, always measuring from the same point. The chain must not have too much play or too much stiffness.

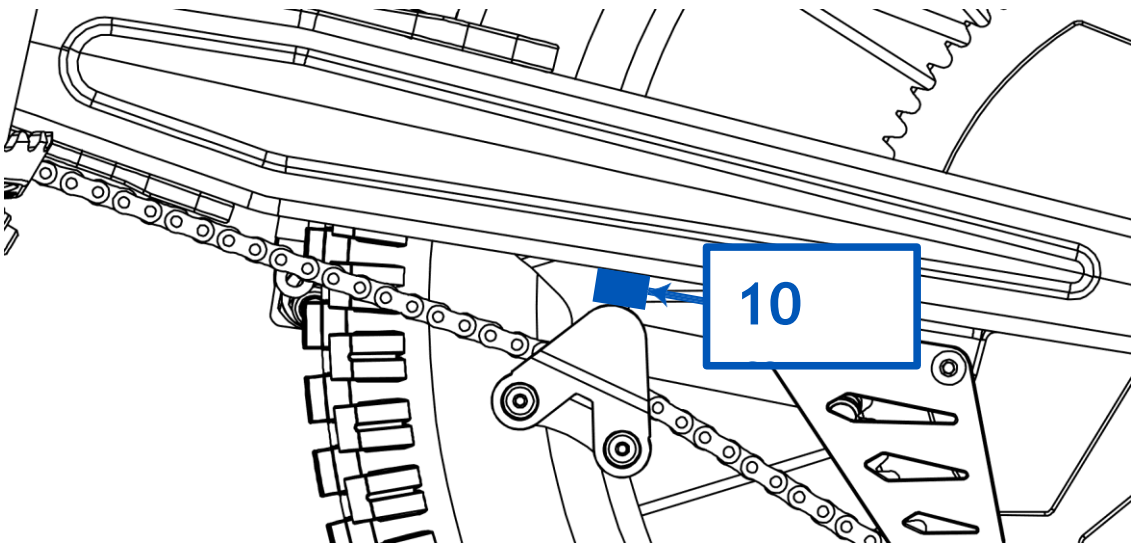

Fig. 18

If the chain slack is not within the values indicated above, adjust the chain tension as follows:

1- The starter button is in the “OFF” position.
2- You must loosen the rear axle nut just enough to be able to move the wheel, to adjust the correct tension.
3- The eccentric adjuster (Fig. 19) must be turned to a position depending on the chain slack and the correct tension must be obtained. It must be ensured that the stop is located between the teeth of the eccentric adjuster and the two sides equally. These components must be placed in the appropriate position according to the required tension level.

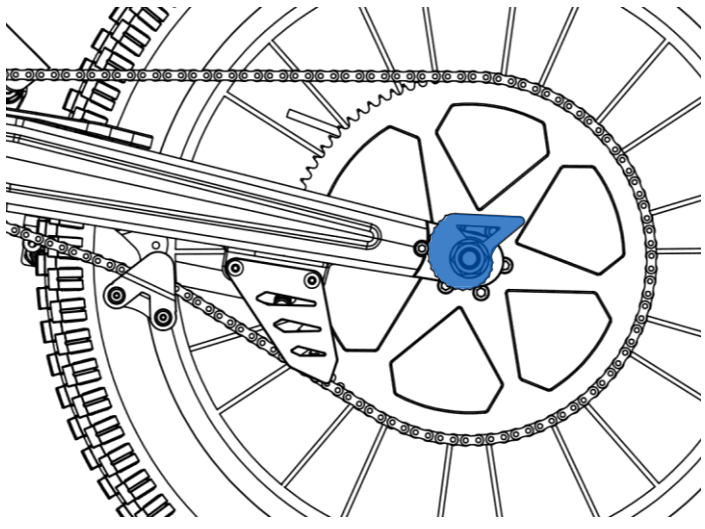

Fig. 19

4- It is necessary to turn the eccentric completely to adjust its position. Figure 19 shows the configuration corresponding to the minimum position of the wheel, which must be maintained until half of the travel is reached.
5- Once the operation has been carried out, the axle nut must be tightened to the specified torque. Tightening torque: 4.2 Kgf.m.
6- Finally, you must lubricate the transmission chain.

WARNING

You must not put your hands near the transmission system while the wheel is turning.

If you notice signs of deterioration or any type of imperfection in the chain, sprocket or crown, it must be replaced.

Furthermore, adjusting the chain requires the use of special tools. If you do not have the necessary means, have the tension of the transmission chain adjusted.

To do this, go to your NEUTRA point of sale or you can contact the official distributor on our website. You can also write to us at our email and our staff will respond as soon as possible.

5.3 ACCELERATION SYSTEM AND VOLTMETER

The installation of the throttle cable must be carried out as shown in the attached image, passing above the battery indicator.



Fig. 20

This arrangement ensures the correct routing of the cable, prevents interference with other components, and guarantees smooth and safe operation of the acceleration system.

Before each use, you must operate the accelerator and check that it automatically and quickly returns to the original position (with the ignition switch in the “OFF” position).

You must check that the indicated screw is correctly fastened (Fig. 21). You must not manipulate it under any circumstances.

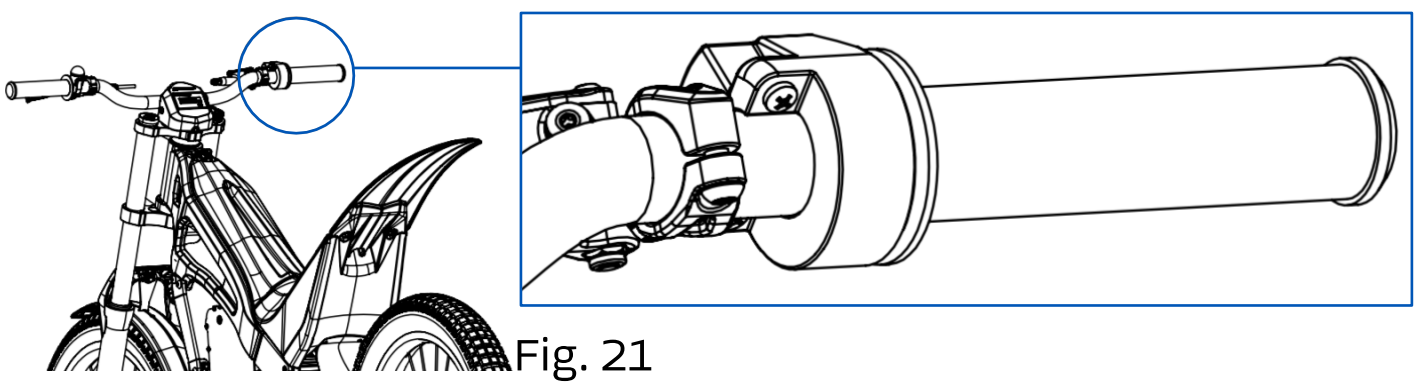

Fig. 21

WARNING

If you notice signs of deterioration or any type of imperfection on the throttle or voltmeter, it must be replaced.

To do so, go to your NEUTRA point of sale or you can contact the official distributor on our website. You can also write to us at our email address and our staff will respond as soon as possible.

5.4 BRAKING SYSTEM

You must check that the front and rear brakes are properly tightened and working properly (Fig. 22).

First of all, you must check that the wheels stop when you operate the brake levers while moving the motorcycle.

You must also check the travel of the brake lever; if it has too long a travel, you must bleed the hydraulic system circuit or change the fluid in this circuit.

It must only be replaced with mineral brake fluid.

You must check the brake pads and discs.

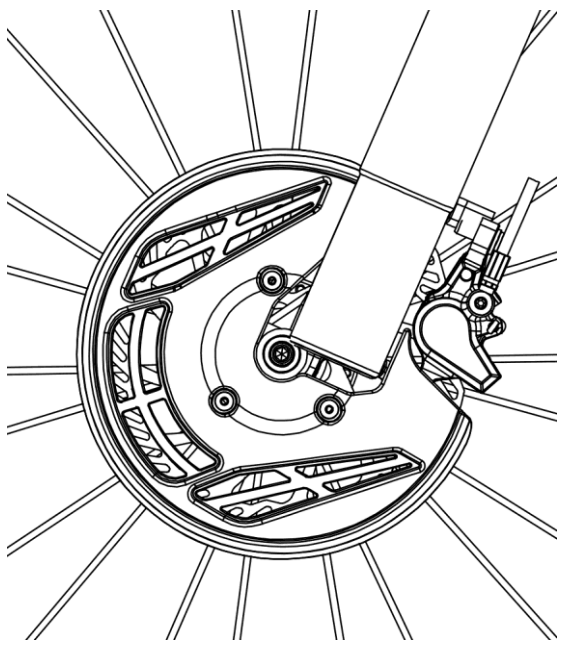

Fig. 22

WARNING

You must not manipulate the brakes until they have cooled down, due to the risk of burning.

CAUTION

If the brake pads come into contact with oil, grease or any unknown chemical product, the affected parts must be replaced. In the case of brake discs, clean them with a special product for cleaning brake discs. You must use special products; you must never use chemical products that are not specific for cleaning brakes.

If signs of deterioration or any type of imperfection are observed in any of the elements of the braking system, they must be replaced.

To do so, go to your NEUTRA point of sale or you can contact the official distributor on our website. You can also write to us at our email address and our staff will respond as soon as possible.

5.5 STEERING

You must check that the handlebars turn correctly. This turn must be smooth and that there is nothing that prevents it from turning freely.

You must raise the front wheel so that it does not interfere with the ground and turn the handlebars in both directions, thus checking that they are working correctly. You must also check the condition of the steering bearings. In this case, to check this, you should try to move the handlebars back and forth, and to see if they are in good condition, there should be no play.

⚠ WARNING

If you notice signs of deterioration or any type of imperfection in the steering or its bearings, it must be replaced.

To do this, go to your NEUTRA point of sale or you can contact the official distributor on our website. You can also write to us at our email address and our staff will respond as soon as possible.

5.6 MAN OVERBOARD

⚠ WARNING

If you notice signs of deterioration or any type of imperfection in this element, it must be replaced.

To do this, go to your NEUTRA point of sale or you can contact the official distributor on our website. You can also write to us at our email address and our staff will respond as soon as possible.

5.7 STARTER BUTTON

You must check the motorcycle's starting by turning the ignition switch to the “ON” position. This button is located on the front, fixed to the left side of the handlebar, as we have seen previously in the image on page 13 of this manual.

Next, you must gently turn the throttle grip with the motorcycle on the central stand and the rear wheel in the air, to check that the engine and the motorcycle are working correctly.

⚠ WARNING

If you notice signs of deterioration or any type of imperfection on this button, it must be replaced.

To do this, go to your NEUTRA point of sale or you can contact the official distributor on our website. You can also write to us at our email and our staff will respond as soon as possible.

5.8 ENGINE

You must check the condition of the engine bearing with the ignition switch in the OFF position. You must raise the rear wheel so that it does not interfere with the ground and turn it by the tire. There should be no unusual noise coming out from the engine.

NOTICE

When turning at low revs, you will notice a slight force from the engine magnets.

⚠ WARNING

You should not put your hand near the transmission system while the engine is turning.

You should not perform any maintenance on the engine or touch it shortly after using the motorcycle, as it may be hot.

Replacing the engine bearing is a difficult operation.

To replace it, go to your NEUTRA point of sale or you can contact the official distributor on our website. You can also write to us at our email and our staff will respond as soon as possible.

5.9 SIDE STAND

The motorcycle is equipped with a side stand, to keep the motorcycle when it is not running.

You must place the motorcycle in an upright position together with the side stand, to keep the motorcycle fixed and prevent it from falling.

You must make sure that the motorcycle is placed on a flat surface.

We can see an image of the stand, where you can see the positioning location of this element on the motorcycle, on page 6 of this manual.

⚠ CAUTION

When the stand is installed, you cannot sit on it, lean on it, or move the motorcycle.

If you notice signs of deterioration or any type of structural imperfection on the stand, it must be replaced.

To do so, go to your NEUTRA point of sale or you can contact the official distributor on our website. You can also write to us at our email address and our staff will respond as soon as possible.

5.10 SCREW TIGHTENING TORQUES

⚠ WARNING

You must check the correct fastening and tightening torques of the most important motorcycle screws, indicated in the following table.

The tightening torques for these screws are specified below:

ÍTEM	TYPE	FINISH	MOUNTING ELEMENT	QUANTITY	TORQUE (Kgf.m)	TYPE OF SEALANT
M6	DIN 6921	ZB	FRONT FIXING SEAT BOX	2	1,2	
M6	DIN 6921	ZB	FRONT FENDER FIXING	1	0,8	
M6	DIN 7991	ZB	SEAT BOX SIDE FIXING	1	1,2	
M8	DIN 7991	ZB	FIXING REAR SHOCK ABSORBER SUPPORT TO FRAME	1	2	
M5	DIN 912	ZB	LOWER POST CLOSING SCREWS	4	0,6	
M5	DIN 912	ZB	UPPER POST CLOSING SCREWS	3	0,8	
M5	DIN 912	ZN	UPPER POST FIXING TO TOWER	4	0,6	

M5	DIN 912	ZB	CROWN FIXATION	6	0,6	MEDIUM SEALANT
M6	DIN 912	ZN	TOWER TO HANDLEBAR FIXING	4	1	
M6	DIN 912	ZN	REAR BRAKE CALIPER BRIDGE FIXING	2	1	
M6	DIN 912	ZB	FRONT WHEEL AXLE	2	1,2	
M6	DIN 912	ZB	MOTOR PINION FIXING	1	1,2	MEDIUM SEALANT
M6	DIN 912	ZB	ELECTRONIC BOX SUPPORT FIXATION	1	0,8	
M8	DIN 912	ZB	REAR SHOCK ABSORBER FIXING	2	2	
M6	DIN 912 / DIN 7991	ZB	ENGINE FIXING	4/2	1,2	MEDIUM SEALANT
M12	SPECIAL	ZB	REAR WHEEL AXLE	1	4,2	
M6	SPECIAL (FLOVED HEAD ALLEN)	ZN	BRAKE CALIPER FIXING	4	1	MEDIUM SEALANT
M8	SPECIAL (CYLIN. HEAD ALLEN)	ZB	FIXING STIRRUPS TO SUPPORT	2	0,4	
M6	SPECIAL (CONICAL HEAD ALLEN)	ZB	STEERING FIXATION	1	0,8	
M10	ISO 7380	ZB	SWINGARM	2	4	
M8	ISO 7380	ZB	FIXING FOOTRUP SUPPORT	4	2	
M8	ISO 7380	ZB	SIDE STRAPS FIXATION	6	2	
M8	ISO 7380	ZB	BATTERY PIN FIXING	2	2	
M8	ISO 7380	ZB	CHAIN TENSIONER FIXING	1	1,8	MEDIUM SEALANT
M5	ISO 7380 (TORX)	ZN	BRAKE PUMP FIXING	4	0,6	
M5	ISO 7380 (TORX)	ZN	FRONT/REAR BRAKE DISC FIXING	12	0,5	MEDIUM SEALANT
M8	ISO 7380 / DIN 7991	ZB	COVER FIXING	2/2	2	
M4	ISO 7380 FL	ZB	REAR CONTROLLER FIXING	2	0,3	
M5	ISO 7380 FL	ZB	FRONT BRAKE HOSE BRIDGE FIXING	1	0,25	
M5	ISO 7380 FL	ZB	REAR BRAKE HOSE BRAKE FIXING	1	0,25	
M5	ISO 7380 FL	ZB	SKATE CHAIN FIXATION	2	0,25	MEDIUM SEALANT
M5	ISO 7380 FL	ZB	FRONT CONTROLLER FIXING	1	0,5	
M5	POELIER ALLEN	ZB	SEAT BOX COVER FIXING	1	0,4	
M6	POELIER ALLEN	ZB	REAR FENDER FIXING	3	0,8	

5.11 SUSPENSIONS

The adjustments to the motorcycle suspension system are explained on pages 24 and 25 of the “USER MANUAL KOUNTRY3 - 2025” found on our website.

6 SPARE PARTS

This product has been developed with a specific design to facilitate the assembly of spare parts and their recyclability, in order to reduce the impact on the environment and improve customer service. To see all the motorcycle components and possible spare parts, please refer to the “MANUAL DE DESPIECE - PARTS BOOK - NEUTRA K3” found on our website.

⚠ WARNING

You must always use original NEUTRA spare parts.

7 TROUBLESHOOTING

If the motorcycle cannot be turned on, the following may be the most common and easy to detect faults:

1- You must check that the accelerator is not activated, check the cable, it must have move without tension.
2- You must check that the contact switch, located on the upper left side of the chassis, is in the “ON” position.
3- You must check that the man overboard is connected correctly.
4- You must check that the battery contains a minimum charge for the motorcycle to work. If the battery is not charged, you must check that its charge or dis-charge connector is not damaged.
5- The battery is charged correctly and the connectors mentioned above are not damaged. You must check that the battery is correctly connected to the rest of the motorcycle through the battery discharge connectors.
6- You must check that the green LED on the controller is on. If the LED is in the state mentioned, the controller is working correctly.
7- You should check if the red LED on the controller is on, this means:
   - That the battery has entered the “sleep time” state. In this case you should disconnect the contact switch and reconnect it.
   - If the red LED is still on or flashing, you should check the table
   - Check that the battery temperature is above zero degrees Celsius. If not, place the battery in a warm place until its temperature exceeds zero degrees Celsius.

LED CODE		ERROR	DETAILS
1,4	● ●●●●	Over Temperature Warning	The controller temperature exceeds 90°C. The current will be limited. Reduce the load on the controller or turn it off until it cools down. Clean the heat sink.
2,3	●● ●●●	Temperature Overload	The controller temperature has exceeded 100°C. The controller will stop, but will restart when the temperature drops below 80°C.
2,4	●● ●●●●	Throttle Error on Power Up	The throttle signal is higher than the preset "dead zone" at power up. The error is cleared when the throttle is released. If the error persists, mechanically adjust the "dead zone" via the throttle cable.
3,2	●●● ●●	Internal Reset	This may be caused by a transient fault condition, such as a temporary over current or momentarily high or low battery voltage. This can occur during normal operation. It is just a warning light; will not prevent continued use of the vehicle.
4,3	●●●● ●●●	Engine overheating	The engine temperature has exceeded the set maximum limit. The controller will shut down until the engine temperature cools down.

Correct interpretation of red LED warning lights:
For example, "1, 2" indicates that the red LED flashes once, then after a pause of one second, it flashes twice. The pause time between the different groups of flash codes is two seconds.

If the motorcycle still does not work, please contact your nearest NEUTRA dealer or you can contact the official distributor on our website. You can also write to us at our email and our staff will reply to you as soon as possible.