TECHNICAL MANUALS

K3

INTRODUCTION

You must read these technical manuals carefully before riding the motorcycle and make your children understand the precautions and safety measures that must be taken.

DOWNLOADS

QR codes for downloading the manuals corresponding to each action.

1.- ASSEMBLY

2.- CHARGER

3.- BATTERY

4.- USER MANUAL

5.- PARTS-BOOK

Before using the K3 motorcycle, you must make sure that you have understood everything written in this manual, paying particular attention to the warnings and safety section.

This manual must always be carried with the motorcycle and must be transferred in any change of ownership.

Before using the motorcycle, you must read this manual carefully and keep it for future reference.

If you have any questions, you can go to your NEUTRA point of sale or you can contact the official distributor on our website.
You can also write to us at our email and our staff will respond as soon as possible.

This manual contains important safety, operation, assembly and preparation information for the correct use of the motorcycle.

The motorcycle is not ready for immediate use, it arrives partially assembled.

You must follow the assembly and preparation procedures indicated in this manual for good motorcycle safety.

You must also take into account the safety information explicit in this manual, to avoid personal injury when assembling and maintaining it.

Where to find safety information:
- Safety labels on the motorcycle.
- Warning symbols together with a word and instructions or information that you should take into account, which you can find in this manual.

DANGER:

A hazardous situation that may result in death or serious injury.

WARNING:

A hazardous situation that may result in death or serious injury.

CAUTION:

Information on practices that do not involve risk of injury. It is used to prevent damage to the motorcycle or the environment.

NOTICE:

Information to assist you in the operation or maintenance of your motorcycle.

This manual also includes the following information:

This publication contains the latest motorcycle information available prior to publication.
NEUTRA reserves the right to make changes at any time without notice and without incurring any obligation.

USER MANUAL

K3

Ver.1.6 NOV-26

TABLE OF CONTENTS

1 INTRODUCTION 3
2 MOTORCYCLE IDENTIFICATION 4
3 SAFETY WARNINGS 4
4 DANGERS AND WARNINGS 6
5 TRANSPORT OF THE MOTORCYCLE 10
6 STARTING AND STOPPING THE VEHICLE 11
7 MOTORCYCLE STORAGE 14
8 FEATURES AND MAINTENANCE 15
9 SPARE PARTS 39
10 TROUBLESHOOTING 39
11 OPERATING MODE IN CASE OF ACCIDENT 41
12 AIRBORNE NOISE EMISSION 42
13 WARRANTY 42
14 INFORMATION 43
15 ACKNOWLEDGEMENTS 43

1 INTRODUCTION

The future of two-wheeled mobility is here.

This motorcycle is designed for young riders' first steps into the world of motorcycling.

This motorcycle has been designed following strict environmental criteria, as it is a clean, quiet motorcycle that requires much less maintenance than combustion motorcycles. Likewise, safety measures have been considered of great importance.

The motorcycle has been carefully designed to be easy to disassemble, to facilitate the assembly of spare parts and its recyclability.

This product offers the rider a unique experience, thanks to its acceleration and speed.

Read this user manual carefully before riding the motorcycle and make your children understand the precautions and safety measures.

This manual contains very important information on safety, to avoid accidents, serious injuries or fatalities in the worst cases. A complete knowledge of the motorcycle, pre-use checks, maintenance and its correct use, among other things, are explained in detail.

Remember that the use of this motorcycle by minors must always be done under the supervision of an adult and trained person.

Many accidents are due to the lack of experience of the rider, so it is advisable to instruct the rider with a training course.

It is forbidden to perform maintenance operations by minors under 16 years of age.

Its use is not recommended for people who do not know how to ride a bicycle.

The motorcycle is only allowed to be used in areas with the relevant permits granted by the country's authorities.

Likewise, it should only be used by riders with a valid license issued by the country’s motorcycle federation or similar entity.

Before using the motorcycle, be sure that you have understood everything that is written in this manual, paying particular attention to the warnings and safety section.

This manual must always be carried with the motorcycle and must be transferred in any change of ownership.

If you still have any questions after reading this manual, go to your NEUTRA point of sale or contact the official distributor on our website.

You can also write to us at our email and our staff will respond as soon as possible.

DANGER

The use of this motorcycle without having carefully read this manual is prohibited.

2 MOTORCYCLE IDENTIFICATION

The K3 serial number is located on the right side of the steering head, (Figure 1) directly engraved on its surface. This number identifies the motorcycle and must match the motorcycle documentation.
In the following image, highlighted in blue, we can see the actual area where the serial number is located.

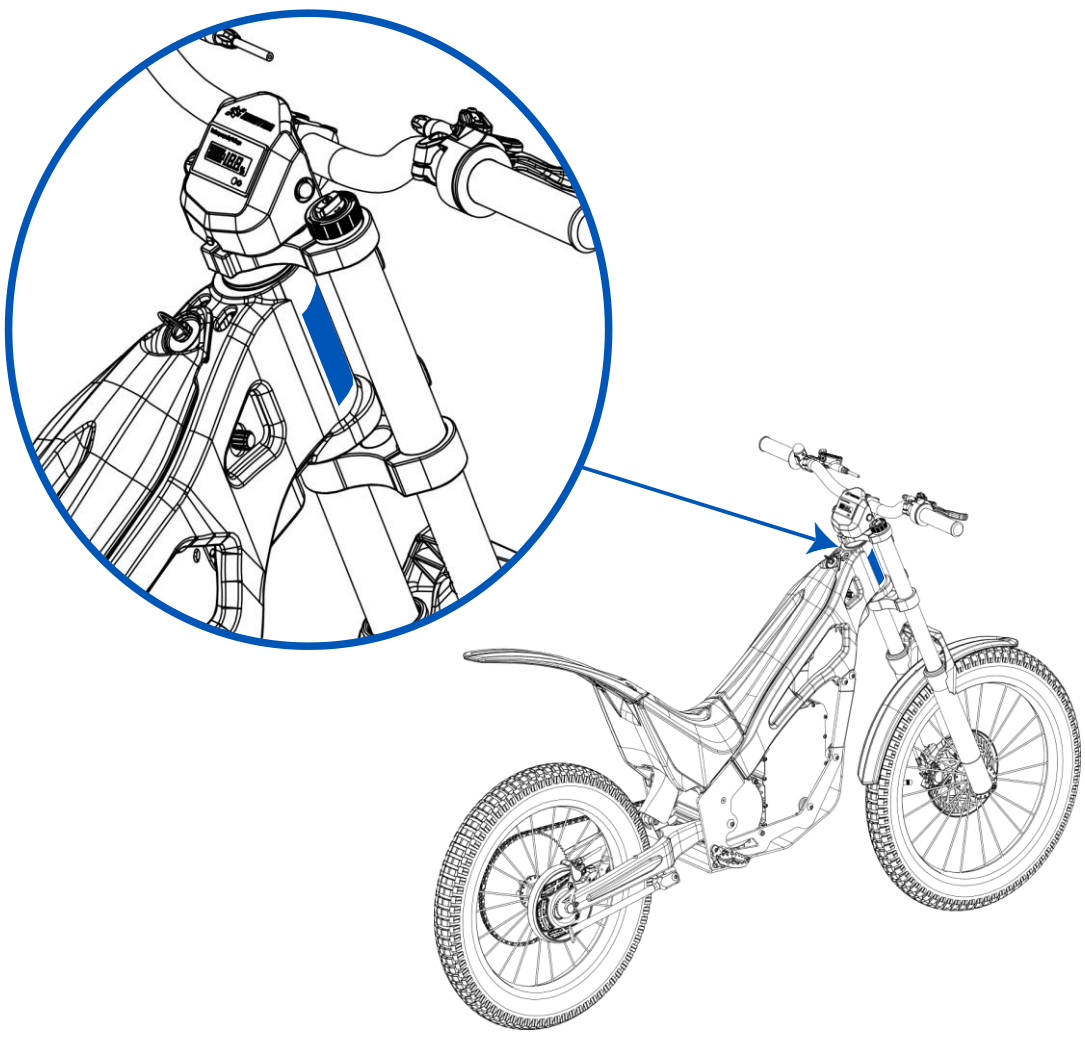

Fig. 1

MODEL	K3 FACTORY	K3 CLUB
FRAME NUMBER	UE1N01S*****	UE1N02S*****

3 SAFETY WARNINGS

This motorcycle has been designed for use off public roads only.
It may be used by children under 14 years of age and with a maximum weight of 35 kg, and when under the supervision of a responsible, trained adult who makes the rider understand the correct use and the explicit warnings in this manual.

WARNING

Always ride the motorcycle with both hands on the handlebars.
To prevent injuries, riders must always wear a helmet and the appropriate protections for the use of the motorcycle.
The appropriate protections are as follows:

- Homologated helmet.
- Gloves, knee and elbow pads.
- Overalls or protective clothing.
- Closed footwear suitable for all weather conditions.

The motorcycle has been designed for exclusive use by one person. This motorcycle does not have any lighting device, therefore, it should only be used in conditions of good visibility.
This motorcycle is not designed for use in extreme weather conditions such as heavy rain, hail, strong wind or snow.
Use by intoxicated or intoxicated persons is prohibited.

DANGER

Improper use of the motorcycle can cause serious personal injury and property damage.

Never operate the motorcycle if it shows any defects or signs of possible damage.

WARNING

In some countries, specific regulations apply according to age, speed limits or areas designated for the use of this type of motorcycle. Please inform yourself and comply with the regulations of the relevant country.

Before each use, carry out the operations described in the subsection “OPERA-TIONS BEFORE STARTINGTHE MOTORCYCLE” corresponding to section 7 “STARTINGAND STOPPING THE MOTORCYCLE”.

3.1 WARNING AND SAFETY STICKERS

There are two warning and safety stickers on the motorcycle with some pictograms pointed to the indicated areas (Figure 2).

They are intended to ensure correct use and to alert drivers of safety precautions.

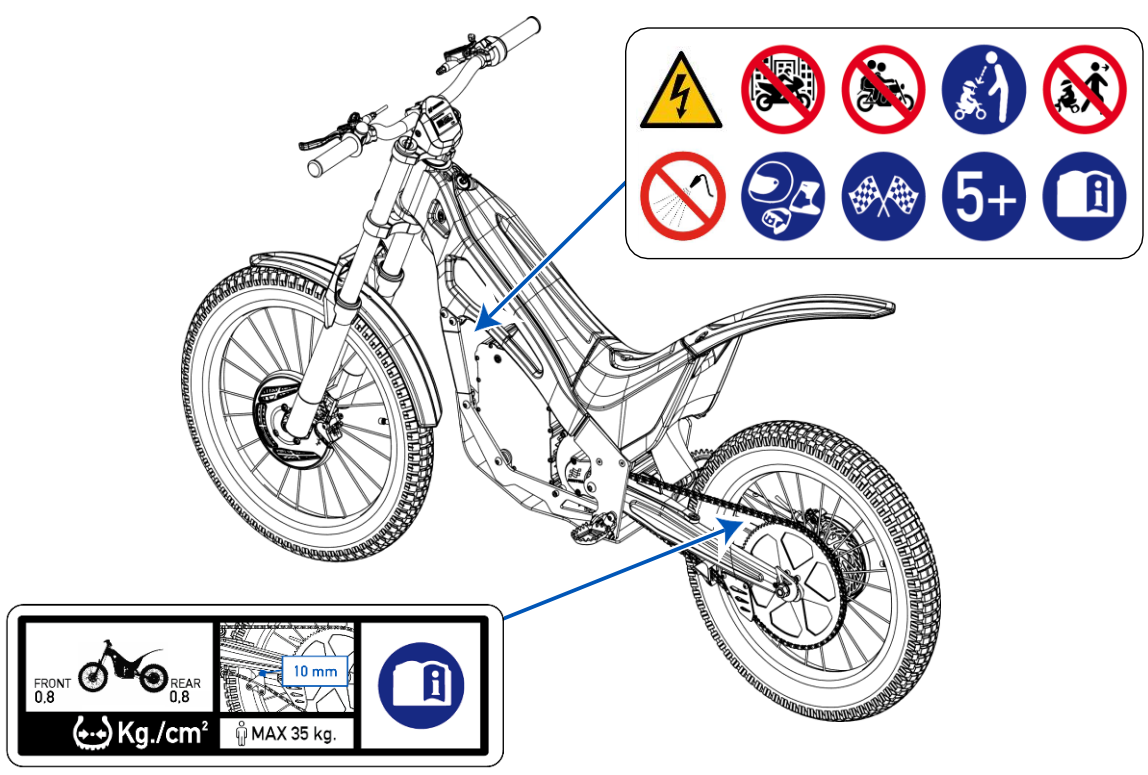

Fig. 2

Below is the meaning of each pictogram:

	Do not touch the electrical contacts. Otherwise, injury may occur. Make sure the battery is disconnected and removed before performing any maintenance.
	It is not legal to use it on public roads, highways, motorways, etc.
	No passengers allowed.
	This motorcycle must be used under the supervision of an adult who is responsible for the child.
	Do not clean the motorcycle with pressurized water. Do not plunge the battery in water.
	Always wear a helmet and protective equipment.

	This motorcycle is designed and manufactured for competition use only.
5+	Minimum age: 5 years old.
	Read the instruction manual before using the motorcycle.
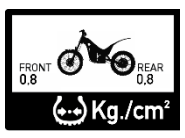	Check tyre pressure when cold (0,8 kgf./cm^2). Maximum rider weight: 35 Kg.
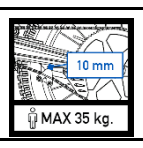	Keep the chain tight and lubricated. Gap between chain and swingarm: 10 mm.

NOTICE

The warning and safety stickers must not be removed under any circumstances and if they are damaged, they must be replaced with new ones.

To obtain replacement warning and safety stickers if they are damaged, please contact your NEUTRA point of sale, or you can contact the official distributor on our website. You can also write to us at our email address and our staff will respond as soon as possible.

WARNING

Always wear protective gloves, boots and eye protection (Figure 3) when unpacking, assembling or servicing the motorcycle to avoid damage.



Fig. 3

4 DANGERS AND WARNINGS

4.1 BURN HAZARD

Some components of the motorcycle can become very hot.

Below is an image (Figure 4) where the components that can become hotter during use are highlighted in red:

- Engine.
- Front and rear brakes.
- Controller.
- Charger (when charging the battery).

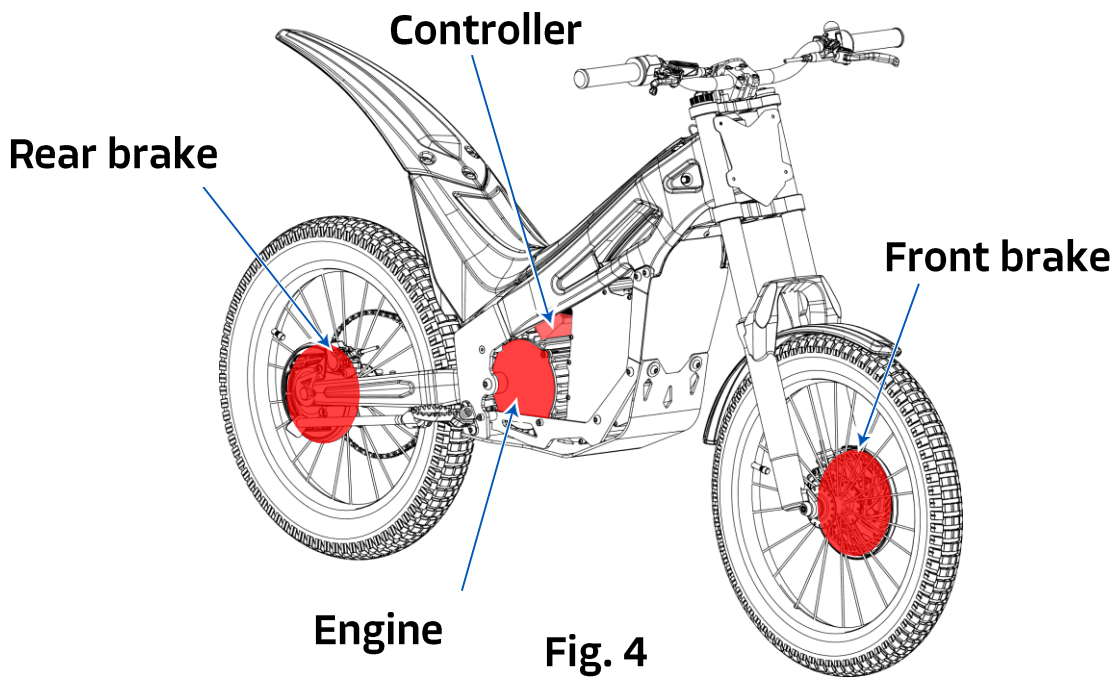

Fig. 4

WARNING

Do not touch any of the components mentioned above until they have cooled down.

4.2 FIRE HAZARD

If the battery is in perfect condition, there is no risk of fire.

DANGER

The battery contained in the electric motorcycle poses a fire hazard.
If your motorcycle catches fire, inform the fire service that a fire has occurred in a motorcycle with lithium-ion batteries.
Never open the battery unit.
The battery is a large energy storage system capable of causing serious damage to people or facilities due to improper use or manipulation of the battery.

The battery can only be repaired by qualified personnel authorized by NEUTRA in writing.

NEUTRA is exempt from and will not be held responsible for any damage caused by the battery to people, equipment or facilities due to improper handling of the battery by unauthorized personnel, or due to impacts or overloads.

Below, are several safety rules regarding the battery.

DANGER

The interior of the equipment cannot be accessed; never open the battery system. Any attempt to open it will void the warranty. There is a high risk of accident if the opening is carried out by unauthorized personnel.

The installation, handling and maintenance of the battery must be carried out by qualified personnel.

It is PROHIBITED to charge the battery with the ignition switch in the ON position.

Do not expose to fire.

Avoid exposing the battery to temperatures above 40°C.

Never open the battery system or any of its components.

Prevent the entry of any liquid and never immerse the battery in any liquid.

Do not hit or drop the battery.

In any case of emergency, call the emergency services and inform them that it is a Lithium battery.

Keep the battery away from children during the charging process.

To avoid electrical accidents, do not leave the battery connected.

WARNING

Battery charging: must be carried out in conditions of humidity less than 75% and a temperature between 0°C and 40°C.

CAUTION

It is forbidden to use any charger that is NOT supplied by the manufacturer.

You should inform yourself more thoroughly about the correct use and precautions of the battery.
For this, refer to the manual “K3/KOUNTRY3 BATTERY MANUAL - 2025” found on our website.

4.3 MAINTENANCE AND HANDLING WARNINGS

At all times, follow the instructions in this manual to properly maintain the motorcycle.

CAUTION

Use the oils and other products indicated in this manual.

WARNING

Use the indicated tightening torques.

For the safety of the rider, use only original K3 spare parts and accessories. NEUTRA is not responsible for damage resulting from the use of other products.

Unauthorized changes, modifications or manipulations may not be made to the motorcycle. If this is done, its safety cannot be guaranteed, and the warranty will be voided.

The motorcycle must be switched off before handling it.

Maintenance must not be carried out on the motorcycle until it has cooled down, due to the risk of burns.

DANGER

Specific training and tools are required to work with electrical systems, as when working under electrical voltage, there is a risk of electric shock. For any maintenance or handling, remove the battery and wait 5 minutes.
This is an important precaution to take due to the risk of electric shock. Under no circumstances should any electrical or electronic components of the motorcycle be opened.

4.4 CLEANING THE MOTORCYCLE

CAUTION

Clean the motorcycle when the engine is cold.

not wash the motorcycle with high-pressure water.

The surface or paint of the parts may be damaged by using chemicals not suitable for cleaning the motorcycle.

After washing, lubricate the transmission system.

To clean the battery, do not use water or any other conductive product. Carefully remove any dirt from it.

To clean the brakes, use specific products, in no case soap or generic chemical products.

WARNING

Finally, make sure that the brakes are thoroughly dried, then check the braking system carefully.

The motorcycle is not designed for immersion in any type of fluid. Remove the battery and wait 5 minutes before starting to wash it.

Do not wash the motorcycle with the battery in place!

Before using the motorcycle, check that the brakes are working perfectly.

The seat box has a drainage hole (Figure 5), which is sealed by a screw.
If, due to exceptional circumstances, water accumulates inside the box, this screw must be removed to allow the accumulated liquid to drain.
It is recommended to carry out this operation following the corresponding safety measures, making sure to reinstall the screw once the process is complete.

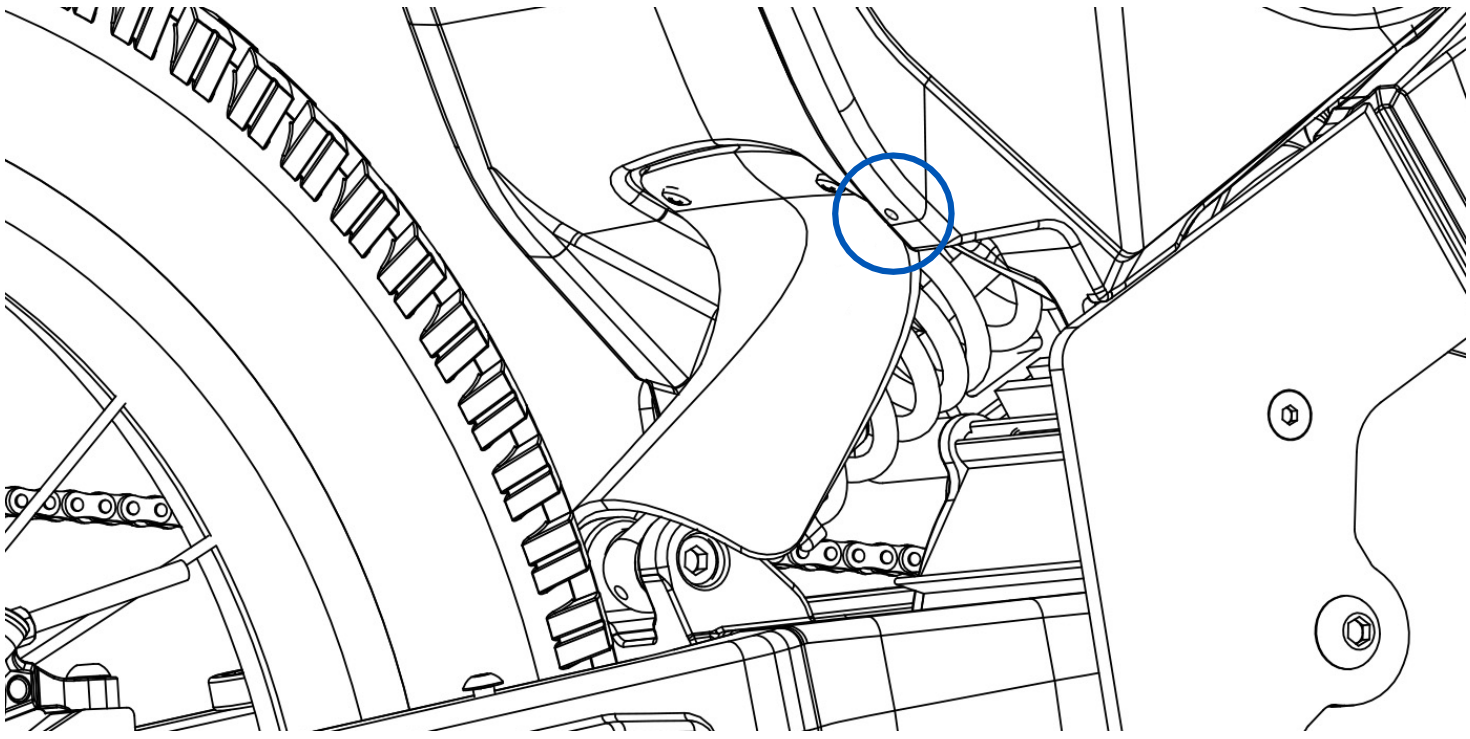

Fig. 5

4.5 WATER RESISTANCE

The motorcycle's electrical components are water and rain-resistant. However, the water level on the road should not exceed the height of the footrest.

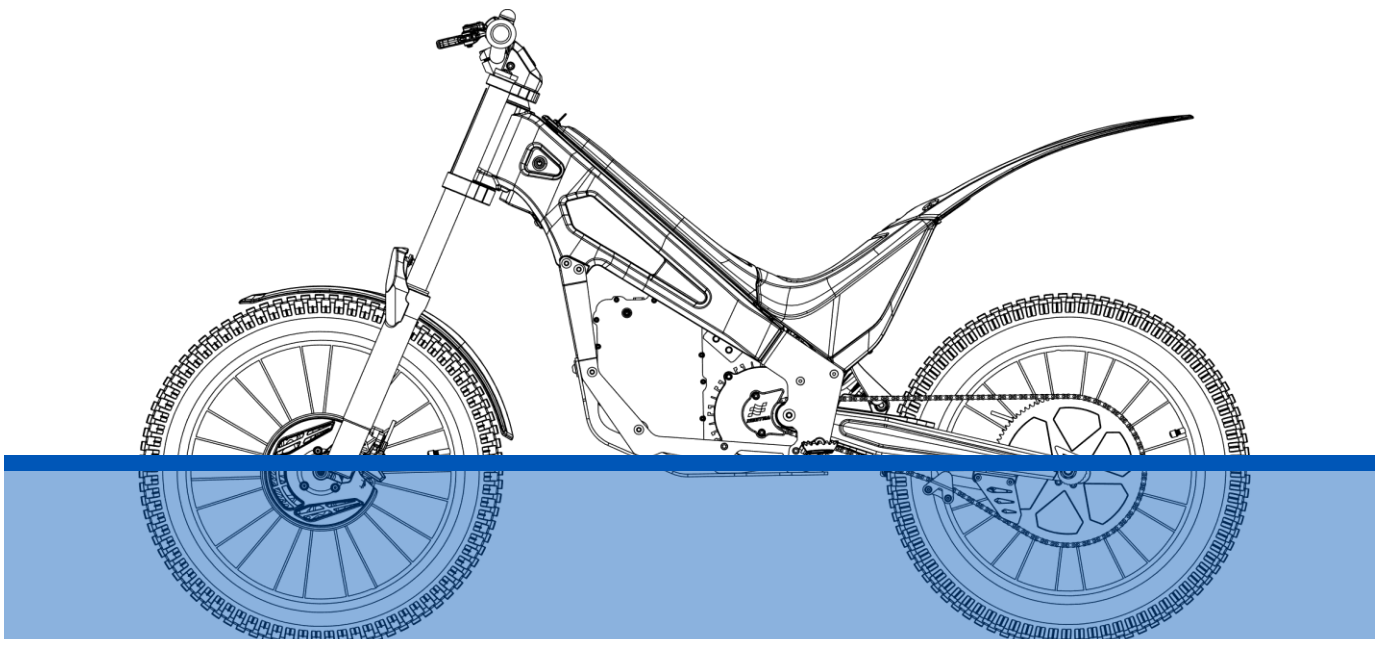

Fig. 6

5 TRANSPORT OF THE MOTORCYCLE

To transport the electric motorcycle (Figure 6) correctly and safely to the place where it will be used, consider the following aspects:

- The motorcycle must be secured in an upright position, with straps or other suitable fastening means to prevent it from falling during transport.
- It must be fixed as indicated in the following image (on both sides):

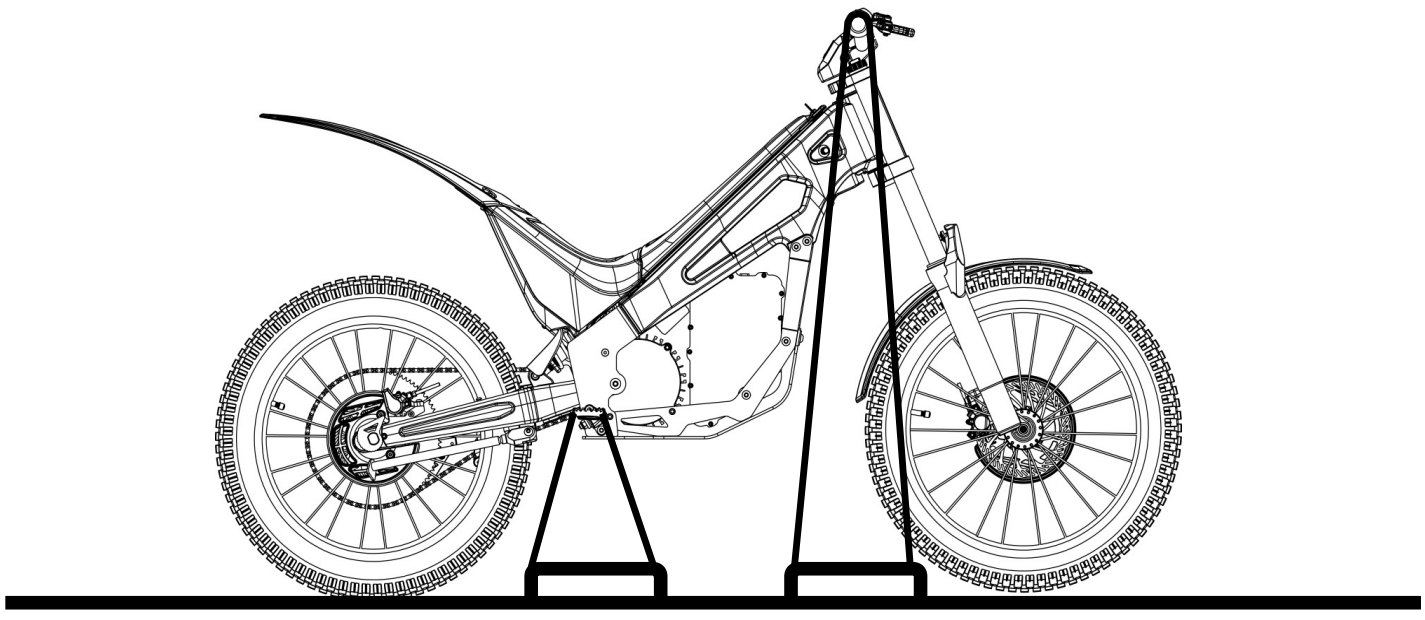

Fig. 7

NOTICE

Ensure that the straps you use to secure the motorcycle during transport do not pinch any of the front and rear brake cables.

It is advisable that the battery in a state of charge of less than 30% of its capacity.

6 STARTING AND STOPPING THE VEHICLE

6.1 OPERATIONS BEFORE STARTING THE MOTORCYCLE

The operations in the following sections of STARTING and maintenance must be carried out by persons over 16 years of age under the supervision of a trained adult.

These operations can be carried out once you have read the entire user manual.

Before starting to break in the motorcycle, carry out the following operations:

- Check that the motorcycle has the ignition switch closed.
- Check that the rims and tyres are in good condition, then check that the tyre pressure is correct as indicated in this manual, 0.8 kgf/cm2 on both wheels.
- Check that the transmission system is working correctly, so that the chain has a play as indicated in this manual, 10 mm with respect to the swing arm.
- Operate the throttle and check that it moves back automatically. And without using the throttle, turn the handlebars left and right and check that the turn does not accelerate.
- Check the brake pads and discs. Replace the pads when there is less than

0.5 mm left (Figure 8) and the discs when there is less than 2.0 mm left.

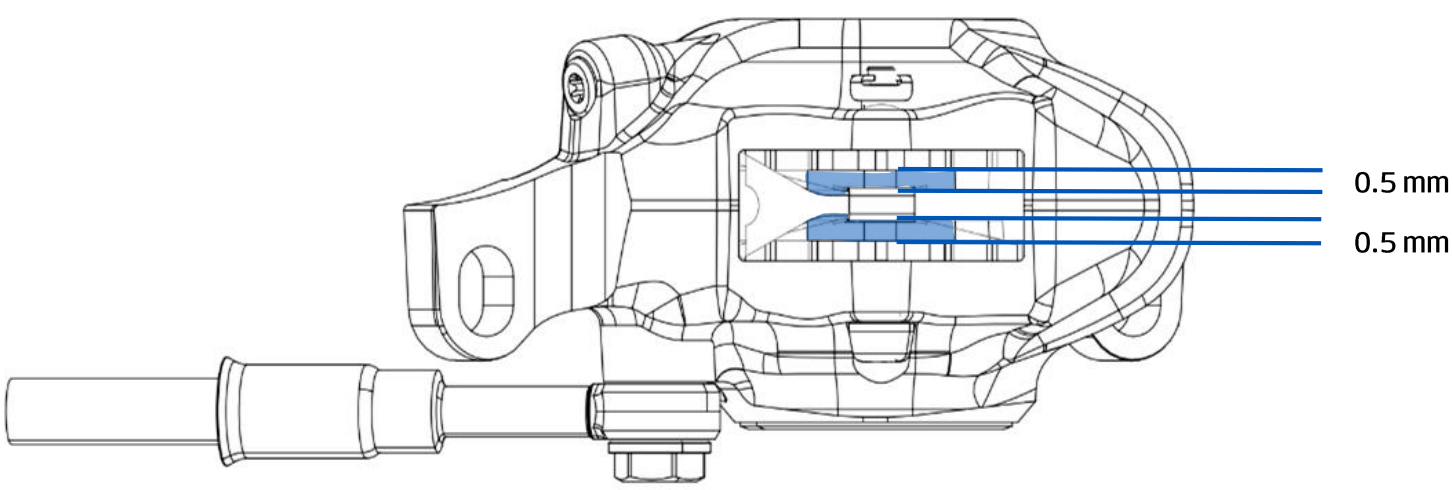

Fig.8

WARNING

Check the travel of the brake lever. If it has too long a travel, bleed the hydraulic circuit of the system.

Also check the braking system by applying the brakes while moving the motorcycle.

- Check that there is nothing that prevents the handlebars from turning to its maximum angle.
- Check that the battery is in good condition and does not present any damage.
- Check that the cables connecting the battery to the motorcycle are well connected and there is no visible damage or stagnant water.
- Check that the battery is well fixed to the motorcycle.
- Next, close the top cover and check that it is properly anchored.
- This motorcycle has a selector located on the upper right front of the frame that allows you to limit the power of the motorcycle. Select the mode chosen before starting. See page 21 of this manual for information on its operation and use.

WARNING

The motorcycle contains a safety device called the MAN OVERBOARD, which stops the motorcycle engine in the event of a fall and thus prevents more serious injuries to the rider.

Before each use, ensure that the MAN OVERBOARD is correctly connected to the motorcycle and above all check that the device is properly fixed on the rider's left wrist.

- Make sure that the MAN OVERBOARD is correctly connected to the motorcycle and well-fixed to the rider's left wrist.

In the following image (Figure 9) we can see the location of this device.

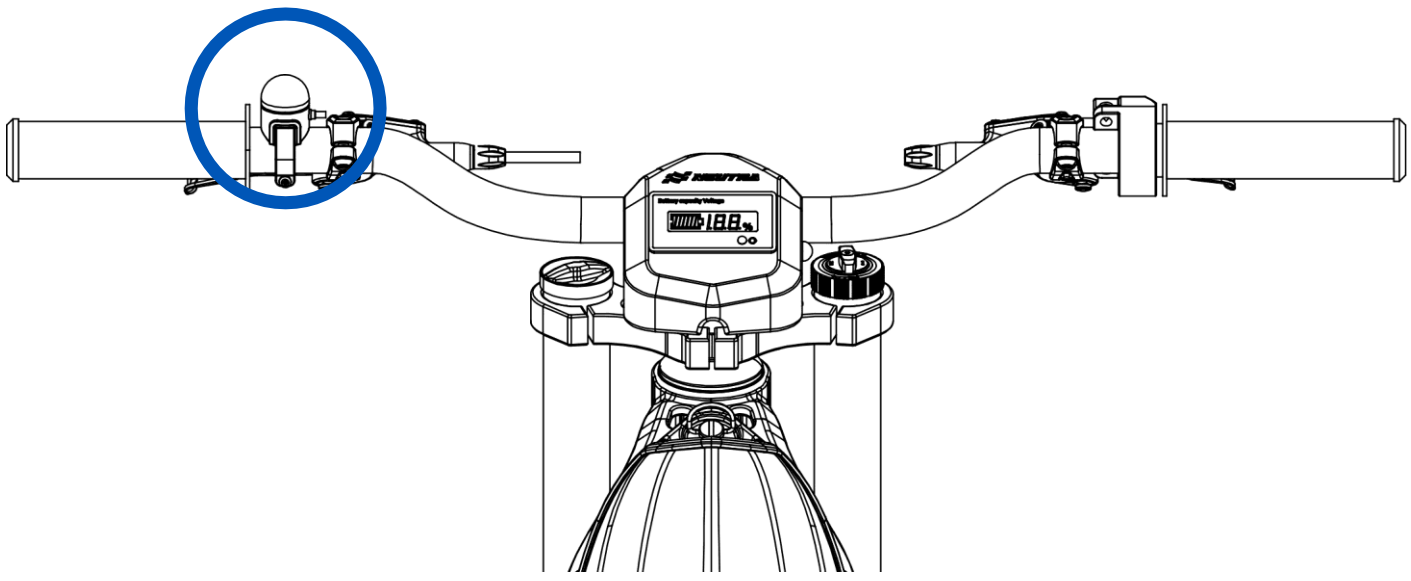

Fig. 9

6.2 STARTING THE MOTORCYCLE

To start the motorcycle, follow the steps below. It is important to always perform this procedure in this order to ensure a correct and safe start.

1- Check that the connection between the battery and the motorcycle is correct (Fig. 10).

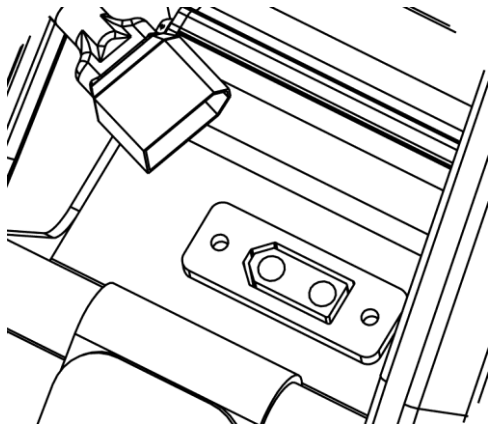

Fig. 10

2- Activate the battery by pressing the button located on the top left of the battery and wait for the indicator to turn green (Fig. 11).

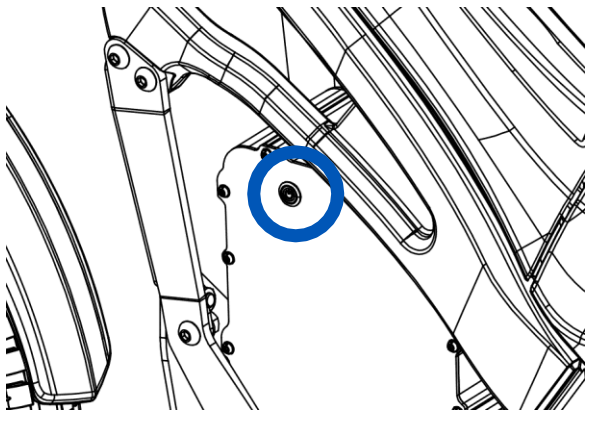

Fig. 11

3- Press the power button located on the left side of the top of the frame (Fig. 12).

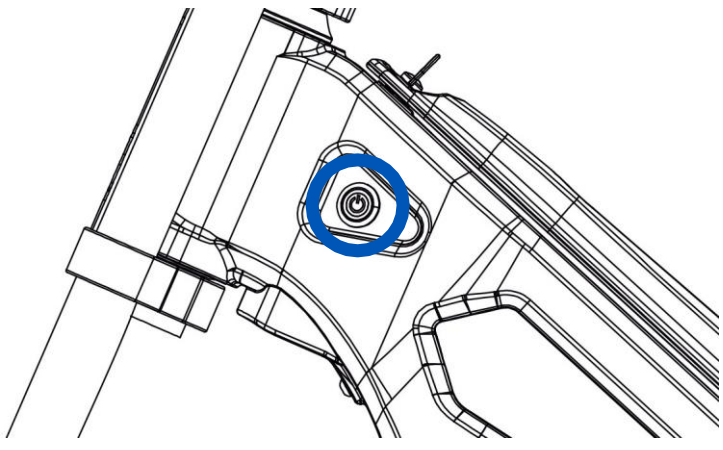

Fig. 12

Finally, with the motorcycle on the stand and the rear wheel in the air, gently turn the throttle to check that the electric motorcycle is working correctly.

From this point on, you can remove the stand and your K3 will be ready to ride.

6.32 PARTIAL STOPPING OF THE MOTORCYCLE

This function is recommended for use at intervals of less than 2 hours. If the rider uses the motorcycle and stops using it for a short period of time, it is recommended to use this function.

1- Press the power button located on the left side of the upper frame (Figure 12).

2- To resume driving, press the power button again located on the left side of the upper frame (Figure 12).

6.4 COMPLETELY STOPPING THE MOTORCYCLE

To turn off the motorcycle, follow the process in reverse order of turning it on. Make sure to always follow this order to avoid possible failures or unnecessary discharges.

1- Press the power button located on the left side of the upper frame (Figure 13).

2- Turn off the battery (Figure 14).

3- Disconnect the battery as indicated on the previous page (Figure 10) and replace the battery connector cover.

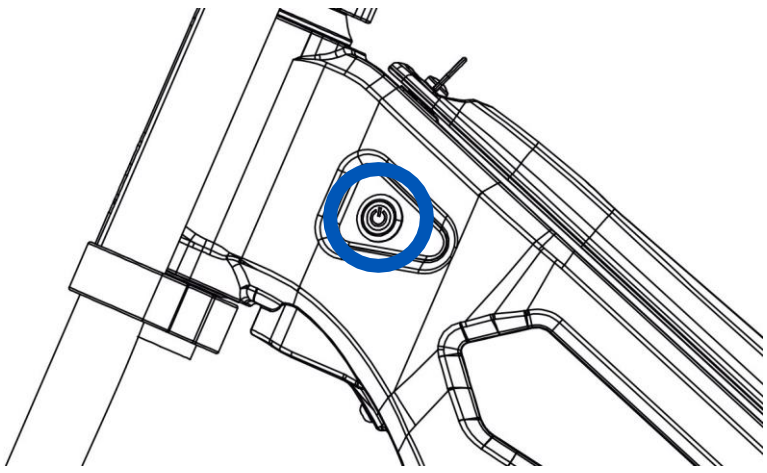

Fig. 13

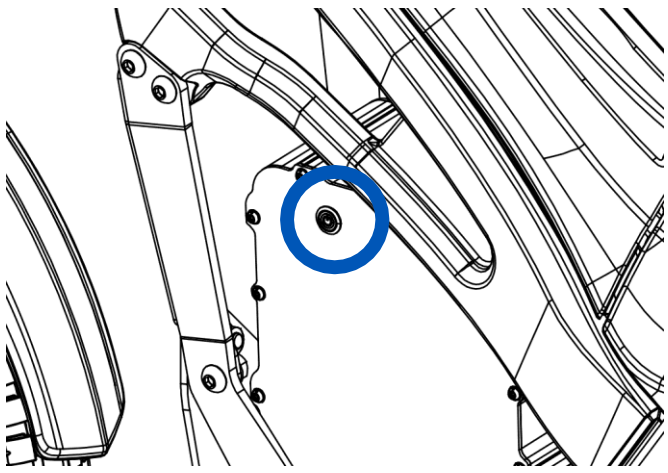

Fig. 14

⚠ CAUTION

Make sure that the motorcycle is on a flat surface.

7 MOTORCYCLE STORAGE

The following points must be taken into account in order to store the motorcycle correctly for a long period of time.

1- Remove the battery from the motorcycle as explained on page 32 and 33.

2- Clean the motorcycle thoroughly and wait for it to dry completely before storing it, and apply a protection product for corrosion and humidity. Follow the instructions detailed in section 4.4 Cleaning the motorcycle.

3- Lubricate the transmission system and all moving parts.

4- Store the motorcycle in an upright position, mounted on the central stand (Accessory).

5- Cover it to avoid dust.

CAUTION

- Store the motorcycle in a clean, dry and well-ventilated place.
- Avoid direct sunlight.
- Keep away from heat sources.
- The ambient temperature must remain between 10°C and 35°C.
- Humidity must be between 30% and 75%.
- Periodically check that all motorcycle components are working properly.
- The battery charge level must be between 40% and 60%. Periodically check this level. If the charge is lower, connect the charger until the indicated level is reached. Otherwise, when the charge is higher, use the motorcycle until the indicated battery level is reached.
- One to three complete battery cycles must be carried out every 3 months to maintain proper performance. Once the previous cycles have been carried out, if you intend to continue storing the motorcycle for a long period of time, it must be returned to the storage conditions mentioned above.

The following aspects must be considered when putting the motorcycle into operation after long-term storage:

- Check the tire pressure.
- Perform general lubrication.
- Charge the battery to 100% of its charge and finally, insert and connect the battery to the motorcycle, if it has been removed.

8 FEATURES AND MAINTENANCE

Unlike combustion motorcycles, electric motorcycles require much less maintenance.

Maintenance operations can be easily carried out with the help of this user manual.

8.1 GENERAL MEASUREMENTS OF THE MOTORCYCLE

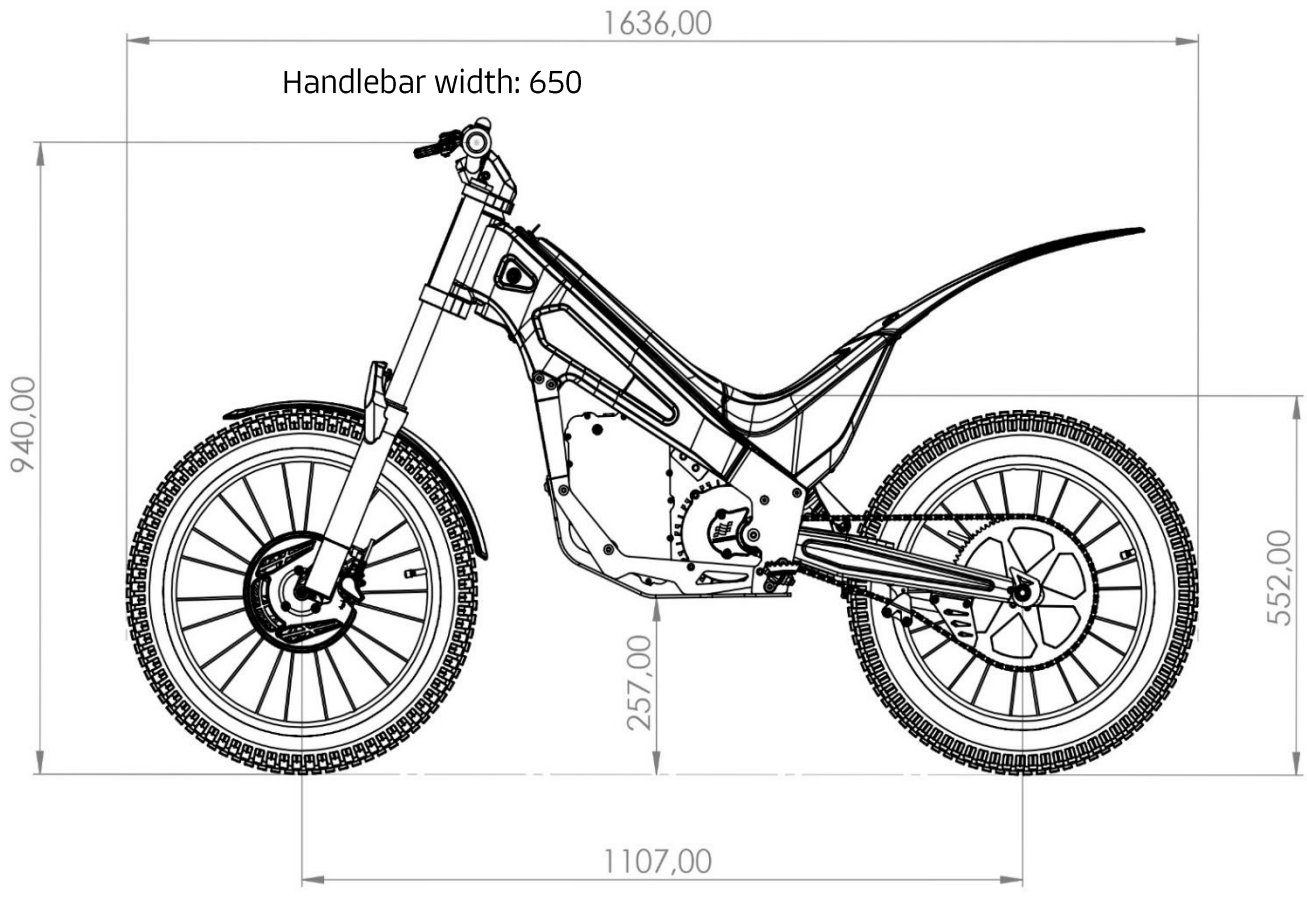

Fig. 15

The measurements shown in the photograph above are approximate.

8.2 RIMS AND TIRES

It is very important to maintain the tire pressure indicated in this manual. You should always check these pressures when the tires are cold.

The recommended pressures for the front and rear tires of the motorcycle are as follows: 0,8 kgf/cm^2.

WARNING

The tires must be in good condition. Some signs that can help you detect when a tire is in poor condition:

- Cracks in the cover.
- Deformation of the casing.

The rims and tyres must always be of the same size and type as specified by the NEUTRA manufacturer.
Changes cannot be made to the type of tyre, as these changes may affect the safety of the motorcycle.

To avoid an accident, in the event of a punctured tyre, stop as soon as possible.
If signs of deterioration or any type of imperfection are observed in the rims, wheel bearings or tyres, they must be replaced.

To do so, go to your NEUTRA point of sale or you can contact the official distributor on our website.
You can also write to us at our email and our staff will respond as soon as possible.

8.3 TRANSMISSION SYSTEM

Check the correct operation of the transmission system.

- Check that the pinion and crown teeth are in good condition.
- Check the chain slack, so that the chain has a slack as indicated in this manual, 10 mm (Figure 16). To check this, turn the wheel and check the slack several times, always measuring from the same point.

  The chain must not have too much slack or too much stiffness.

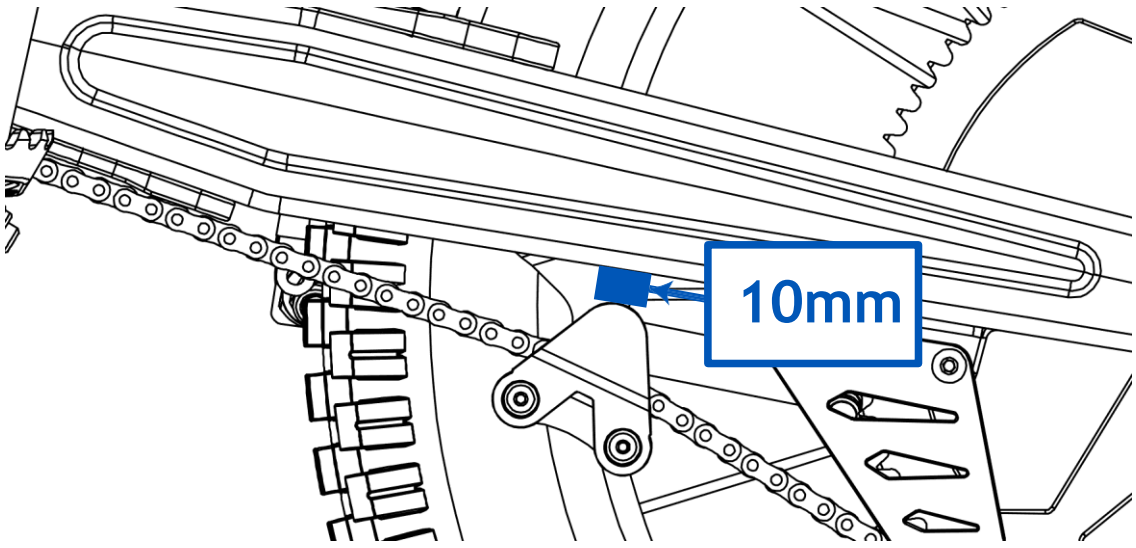

Fig. 16

⚠ WARNING

A bad chain tension can cause an accident or overheating of the engine and its stop for safety reasons.

If the chain slack is not within the values indicated above, adjust the tension of the chain as follows:

1- The starter button is in the “OFF” position.

2- Loosen the rear axle nut just enough to be able to move the wheel, to adjust the correct tension.

3- Turn the eccentric adjuster (Figure 17), to a position depending on the chain slack, and obtain the correct tension. Make sure that the stop is located between the teeth of the eccentric adjuster and the two sides equally. These components must be placed in the correct position according to the required tension level.

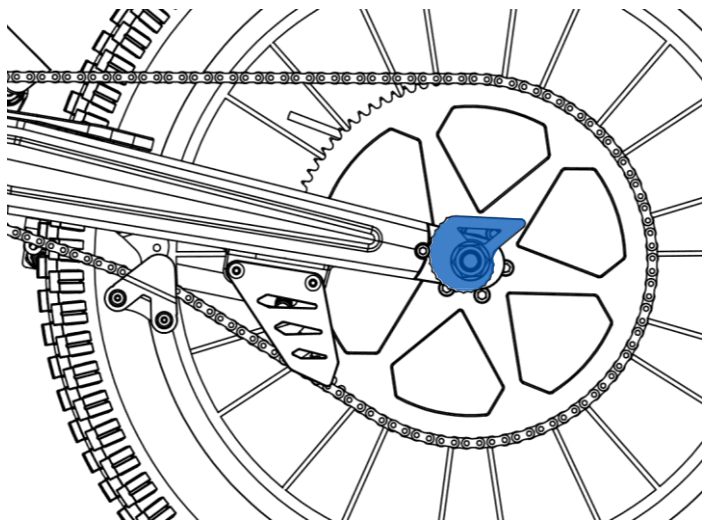

Fig. 17

4- It is necessary to turn the eccentric completely to adjust its position. Figure 17 shows the configuration corresponding to the minimum position of the wheel, which must be maintained until half of the travel is reached.

5- Once the operation has been carried out, the axle nut must be tightened to the specified torque: 4.2 Kgf.m.
6- Finally, the transmission chain must be lubricated.

Once you have checked that the transmission elements are in good condition and that there is a correct chain play, turn the wheel to check the correct operation of all the elements of the transmission system.

Clean and lubricate the chain regularly to ensure good maintenance; when doing so, protect the brake system before applying the product.

WARNING

Do not put your hand near the transmission system while turning the wheel.
Do not mount one or more damaged transmission elements with new ones, as this will cause uneven wear.
Poor maintenance of the transmission system can affect the stability and, consequently, the safety of the motorcycle and the rider. For example, if the chain breaks, it can wrap around the rear wheel and block it, which can cause a serious accident.
If signs of deterioration or any type of imperfection are observed in the chain, sprocket or crown, it must be replaced.

Furthermore, adjusting the chain requires the use of special tools.
If you do not have the necessary means, have the tension of the drive chain adjusted. To do this, go to your NEUTRA point of sale or you can contact the official distributor on our website.
You can also write to us at our email and our staff will respond as soon as possible.

8.4 THROTTLE SYSTEM AND VOLTMETER

Before each use, operate the throttle and check that it automatically and quickly returns to the original position (with the ignition switch in the “OFF” position).

Check that the indicated screw is correctly fastened (Figure 18). Do not tamper with it under any circumstances.

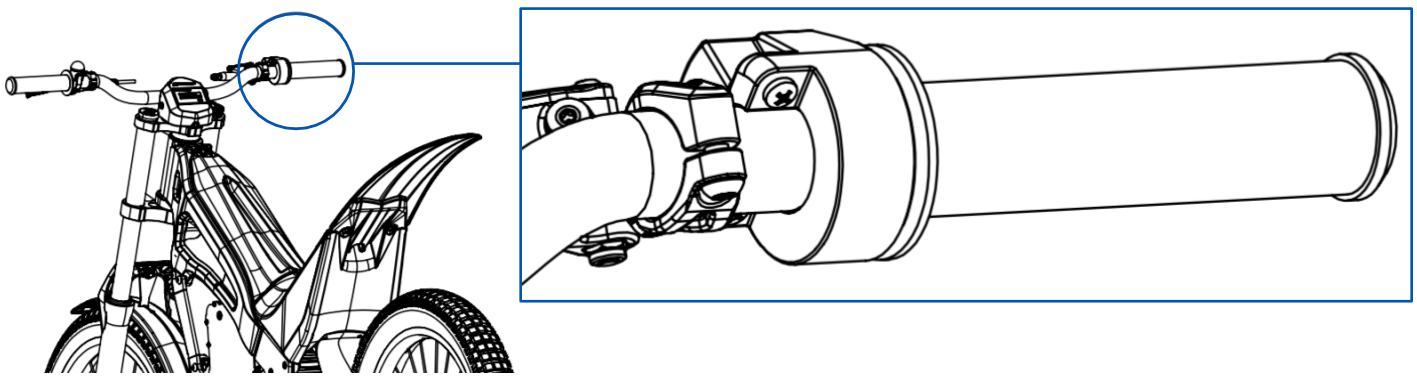

Fig. 18

Before each use, operate the throttle and check that it automatically and quickly returns to the original position (with the ignition switch in the “OFF” position).

The motorcycle is equipped with an element located on the left side of the handlebar; this contains a screen where the battery charge level is indicated (Figure 19). This indicator shows the battery voltage.

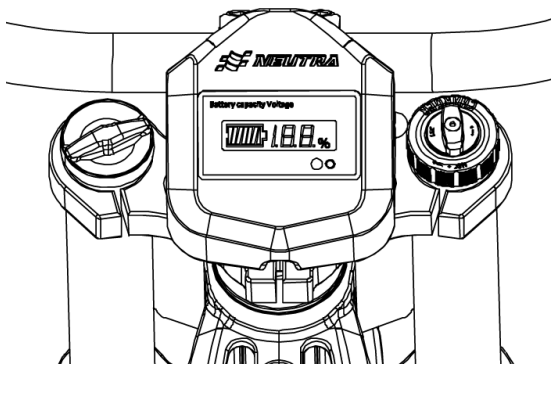

Fig. 19

WARNING

If you notice signs of deterioration or any kind of imperfection on the accelerator or voltmeter, it must be replaced.

To do so, go to your NEUTRA point of sale or you can contact the official distributor on our website.

You can also write to us at our email address and our staff will respond as soon as possible.

8.5 BRAKING SYSTEM

Check that the front and rear brakes are properly tightened and working properly (Figure 20).

First, check that the wheels stop when you operate the brake levers while moving the motorcycle.
Also check the travel of the brake lever; if it has too long a travel, bleed the hydraulic system circuit or change the fluid in this circuit.

It must only be replaced with mineral brake fluid.

Check the brake pads and discs.

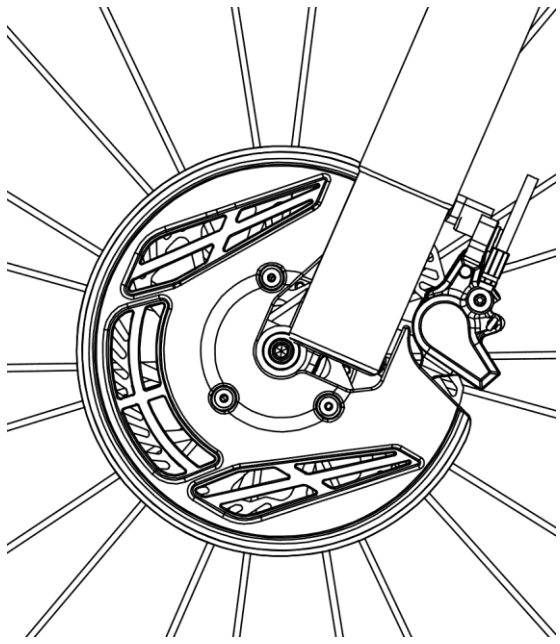

Fig. 20

⚠ CAUTION

Use special products; never use chemical products that are not specific for cleaning brakes.

⚠ WARNING

Do not manipulate the brakes until they have cooled down, due to the risk of burning. If the brake pads come into contact with oil, grease or any unknown chemical product, the affected parts must be replaced, and in the case of the brake discs, they must be cleaned with a special pro-duct for cleaning brake discs.
If signs of deterioration or any type of imperfection are observed in any of the elements of the braking system, it must be replaced.

To do so, go to your NEUTRA point of sale or you can contact the official distributor on our website.
You can also write to us at our email address and our staff will respond as soon as possible.

8.6 STEERING

Check that the handlebars turn correctly; this turn must be smooth and that there is nothing that prevents it from turning freely.
Raise the front wheel so that it does not interfere with the ground and turn the handlebars in both directions, thus checking that they are working correctly.
Also check the condition of the steering bearings. In this case, to check this, you should try to move the handlebars back and forth to see if they are in good condition, and there should be no play.

⚠ WARNING

If you notice signs of deterioration or any type of imperfection in the steering or its bearings, it must be replaced.

To do this, go to your NEUTRA point of sale or you can contact the official distributor on our website.
You can also write to us at our email address and our staff will respond as soon as possible.

8.7 MAP SWITCH

The NEUTRA K3 has a selector located on the upper right side of the chassis with five engine maps, each designed specifically for trial practice and combining power, torque and speed.
These modes adapt to different skill levels, making the K3 suitable for all levels of trial riding (Figure 21).

Map 1 (ECO) - Offers smooth and controlled performance, ideal for beginners.
Map 2 to 4 - Intermediate maps offer a progressive increase in performance, allowing riders to improve their skills step by step.
Map 5 (MAX) - Offers maximum power and immediate response capacity for expert riders.

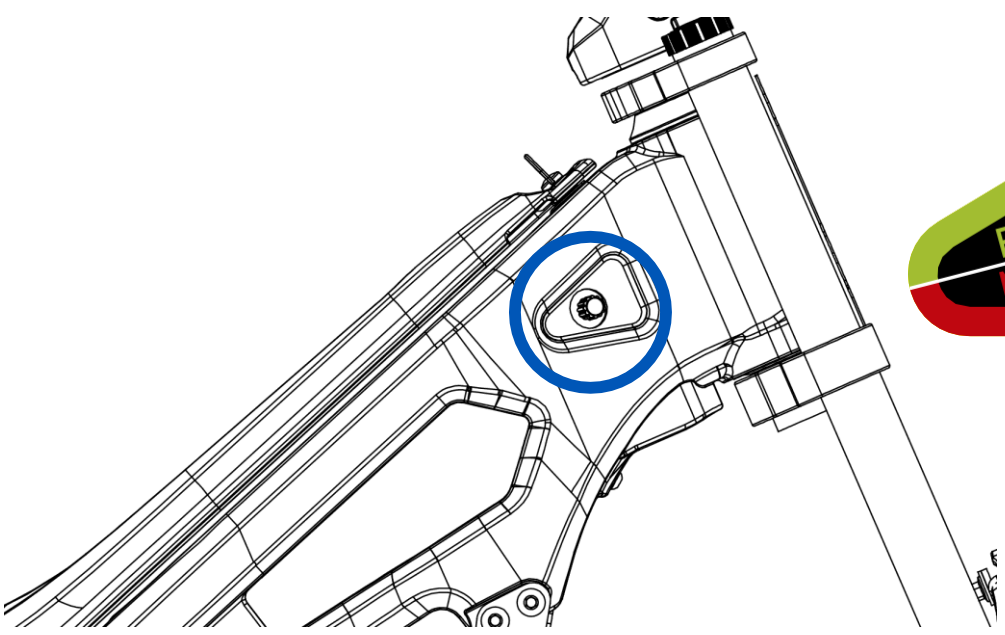

1-ECO
2-LOW
3-MED
4-HIGH
5-MAX

Fig. 21

WARNING

If signs of deterioration or any type of imperfection are observed in this element, it must be replaced.

To do so, go to your NEUTRA point of sale or you can contact the official distributor on our website. You can also write to us at our email and our staff will respond as soon as possible.

8.8 MAN OVERBOARD

WARNING

If you notice signs of deterioration or any type of imperfection on this element, it must be replaced.

To do so, go to your NEUTRA point of sale or you can contact the official distributor on our website. You can also write to us at our email and our staff will respond as soon as possible.

8.9 START BUTTON

Check the motorcycle's starting by putting the ignition button in the “ON” position.
This button is located on the left side of the upper part of the chassis, as we have seen previously in section 6.2 on page 13 of this manual.

Next, gently turn the throttle grip with the motorcycle on the stand and the rear wheel in the air to check that the engine and the electric motorcycle are working correctly.

WARNING

If you notice signs of deterioration or any type of imperfection on this element, it must be replaced.

To do this, please go to your NEUTRA point of sale or you can contact the official distributor on our website. You can also write to us at our email and our staff will reply as soon as possible.

8.10 ENGINE

Check the condition of the engine bearing. Raise the rear wheel so that it does not interfere with the ground and turn it by the tire. No strange noise should be heard coming from the engine.
The motor is equipped with a breather valve that must always be kept free from obstructions. It must not be cleaned with or exposed to high-pressure water. In the event of damage or failure, it must be replaced immediately.
Failure to comply with these instructions may result in the loss of the motor warranty.

WARNING

Do not put your hand near the transmission system while the engine is turning.
Do not perform maintenance on the engine or touch it shortly after using the motorcycle, as it may be hot.

Replacing the engine bearing is a delicate operation. To have it replaced, please go to your NEUTRA point of sale or you can contact the official distributor on our website. You can also write to us at our email and our staff will reply as soon as possible.

8.11 FRAME

The frame does not require periodic maintenance, but it is important to check that it is in perfect condition in the event of a fall or accident.

⚠ WARNING

If you notice signs of deterioration or any type of imperfection on this element, it must be replaced.

To do so, go to your NEUTRA point of sale or you can contact the official distributor on our website. You can also write to us at our email address and our staff will respond as soon as possible.

8.12 SIDE STAND

This motorcycle is equipped with a side stand, to keep the motorcycle upright when it is nor running (Figure 22).

Place the motorcycle in a vertical position together with the side stand, to keep the motorcycle fixed and prevent it from falling. Ensure that the motorcycle is placed on a flat surface.

Position the motorcycle side stand, as shown in the following image.

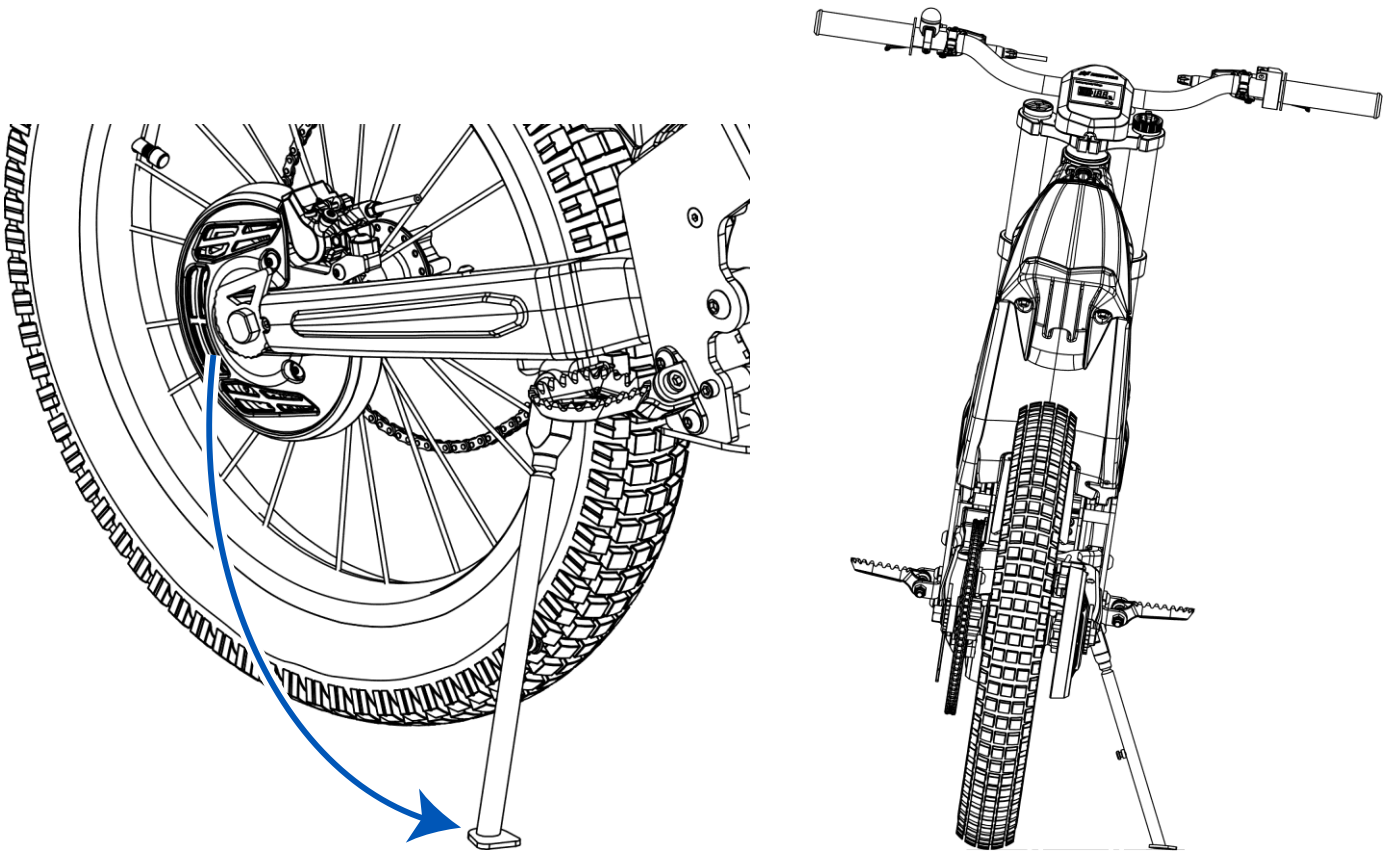

Fig. 22

⚠ CAUTION

When the stand is in use, do not sit or lean on it, nor move the motorcycle.
If signs of deterioration or any type of structural imperfection are observed on the stand, it must be replaced.

To do so, go to your NEUTRA point of sale or you can contact the official distributor on our website. You can also write to us at our email address and our staff will respond as soon as possible.

8.13 BODYWORK

⚠ WARNING

Before each use, check that the tank is properly fixed to the frame and that the three quick release fixing screws are not damaged and are working correctly.
If you notice signs of deterioration or any type of structural imperfection in the tank, it must be replaced.

To do so, go to your NEUTRA point of sale or you can contact the official distributor on our website. You can also write to us at our email address and our staff will respond as soon as possible.

8.14 SUSPENSIONS

To adjust, check or maintain the suspensions, the motorcycle must be placed on a cantilever using a central stand, making sure that the wheels do not meet the ground (Figure 23).

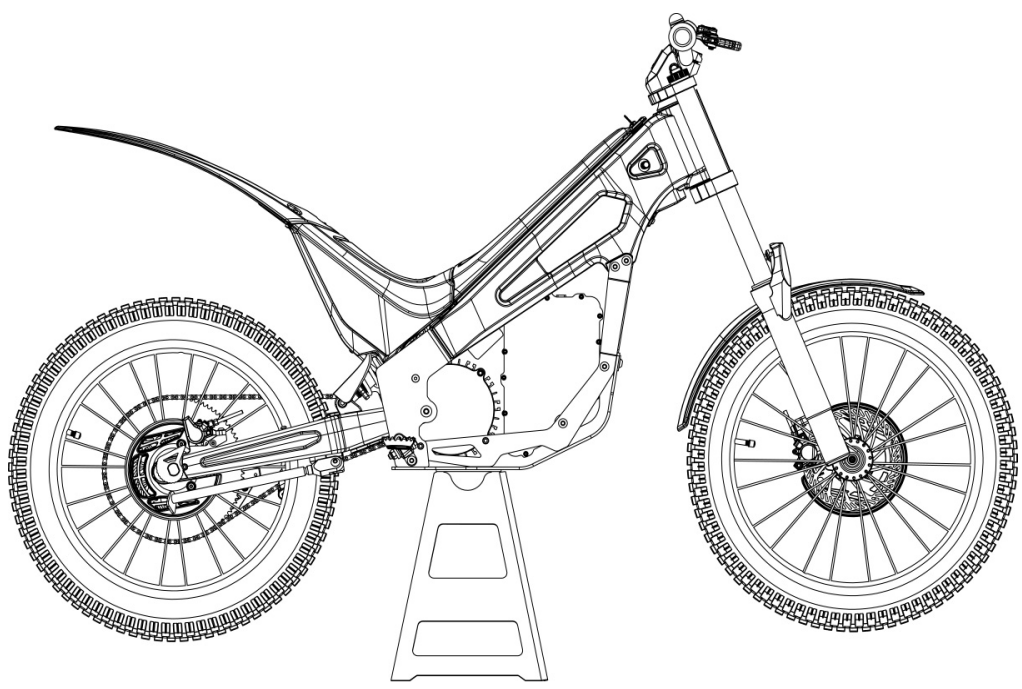

Fig. 23

8.14.1- FRONT SUSPENSION

The fork requires the use of a high-quality lubricant specifically designed for suspension systems. Mobil 222 (Motul GREASE 200) is recommended, as it is formulated to ensure smooth operation, proper damping, and excellent resistance to foaming under intensive use conditions.
For optimal performance, each stanchion should be filled with approximately the same amount, around 10 to 20 g each, depending on the desired suspension behaviour. This quantity helps maintain the right balance be-tween fork sensitivity and impact absorption capacity, ensuring a smooth and stable ride.

NOTICE

Do not mix different types of lubricants and carry out maintenance according to the manufacturer's recommended intervals to extend the service life of the system. The lubricant should be 5W or 7.5W, depending on usage.

- AIR SUSPENSION

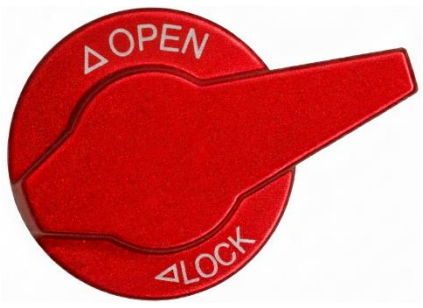

Fig. 24a

Compression.
Upper part of the right fork, it is recommended to close and then open +1.5 turns.

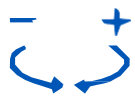



Fig. 25a

Preload.
Main air chamber: Fill with air according to the pressure suggested by the table.

RIDER WEIGHT		
LBS	KGS	AIR PRESSURE KG/PSI
33	15	3,0-3,3 (42-47)
44	20	3,3-3,5 (47-50)
55	25	3,5-3,8 (50-54)
66	30	3,8-4,0 (55-57)
77	35	4,2-4,5 (58-60)

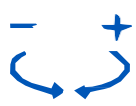



Fig. 26a

Rebound.
Right fork bottom, it is recommended to close and then open +1.5 turns.

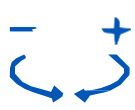

NOTICE

The maximum pressure can never exceed 4.5kg/64psi.
Never tighten it to the maximum with force, both open and closed. Always handle by hand, do not use tools.



Fig. 24b

Compression.
Upper part of the right fork, it is recommended to close and then open +1.5 turns.

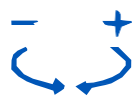



Fig. 25b

Preload.
Top part of the left fork. Turning it clockwise increases the spring preload, while turning it counterclockwise reduces it. The preload should be adjusted according to the rider's weight and the desired performance.

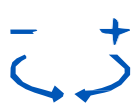



Fig. 26b

Rebound.
Right fork bottom, it is recommended to close and then open +1.5 turns.

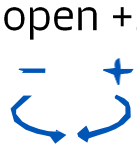

NOTICE

Never tighten it to the maximum with force, both open and closed. Always handle by hand, do not use tools.

8.14.2- REAR SUSPENSION

SERIES SPRING 450lbs, Riders 20-30kg

ACC SPRINGS 350lbs, Rider under 20kg

ACC SPRINGS 550lbs, Rider over 30kg

Dead play between 1.5-2cm

Hydraulic rebound: from the position closest to the shock absorber, i.e., the rotating wheel at the maximum “FAST” point, it is recommended to turn in the direction of “SLOW” +15p.

NOTICE

Never tighten to the maximum with force, both open and closed. Always handle by hand, do not use tools.

8.15 BRAKE LEVER ADJUSTMENT

8.15.1- Brake lever adjustment:

The brake levers can be adjusted using a screw, allowing you to achieve the optimal distance according to the rider's preferences. Below is an image showing the location of the screw on the brake lever to facilitate its adjustment.

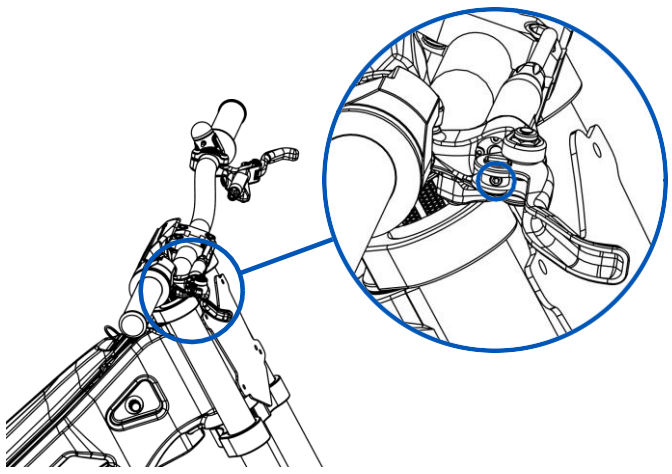

Fig.27

8.16 BATTERY

The Battery System controls and manages the operation of all its cells during the vehicle's charging and discharging processes.

8.16.1- Thermal Protection During Charging:

Blocks charging when the external temperature is below 0°C.

Blocks charging when the external temperature exceeds 45°C.

8.16.2- Thermal Protection During Discharging:

Blocks discharging if the external temperature is below 0°C. Blocks discharging if the external temperature exceeds 45°C.

8.16.3- Cell Balancing:

Ensures that all battery cells charge uniformly to optimize performance.

8.16.4- Process Optimization:

Enhances efficiency during charging and discharging phases.

This is achieved through the BMS (Battery Management System), an integrated component inside the battery. The BMS is essential for ensuring the proper functioning of the vehicle. Any attempt to modify or tamper with it is strictly prohibited, as it could compromise the system's safety, performance, and durability.

NOTICE

IMPORTANT NOTE FOR EXTREME LOW-TEMPERATURE CONDITIONS

In cases of low ambient temperatures (between -10°C and 0°C), the battery must reach a temperature above 0°C to activate the vehicle. Once activated, the system will increase the battery temperature, allowing safe and proper operation even when external temperatures range be-tween 0°C and -10°C.

The removable battery design makes it easy to store or transport in an environment with a temperature above 0°C, preventing risks associated with extreme cold. Therefore, it is not necessary to keep the rest of the vehicle at this temperature, although doing so is recommended to maintain optimal performance.

Finally, driving in external temperatures of -10°C or lower is not recommended, as it could significantly affect the battery's lifespan.

Additionally, the vehicle is equipped with a safety electrical relay that protects the battery, ensuring optimal performance and prolonging its lifespan.

8.17 RELAY

This relay is located inside the seat compartment and is accompanied by a fuse designed to protect the vehicle's entire electrical system.

If an electrical issue is detected, it is recommended to check whether the fuse is in good condition.

To access the fuse, follow these steps:

1- Remove the seat cover by loosening the corresponding Allen screw.

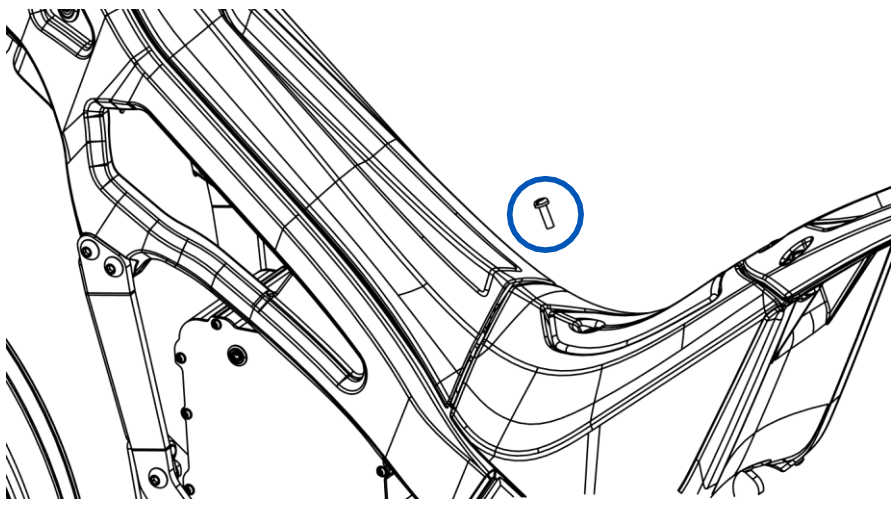

Fig. 28

2- Use a flathead screwdriver to pry into the designated slot and remove the cover, which has snap-fit pins secured in the seat holes.

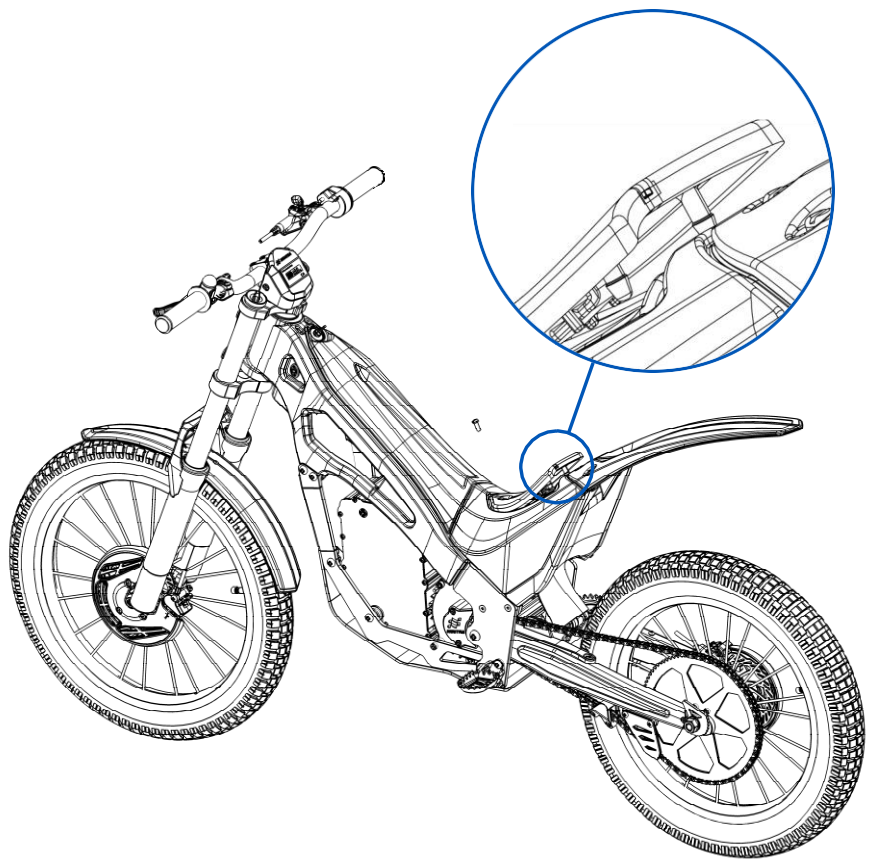

Fig. 29

3- Once the cover is removed, you will find the fuse inside.

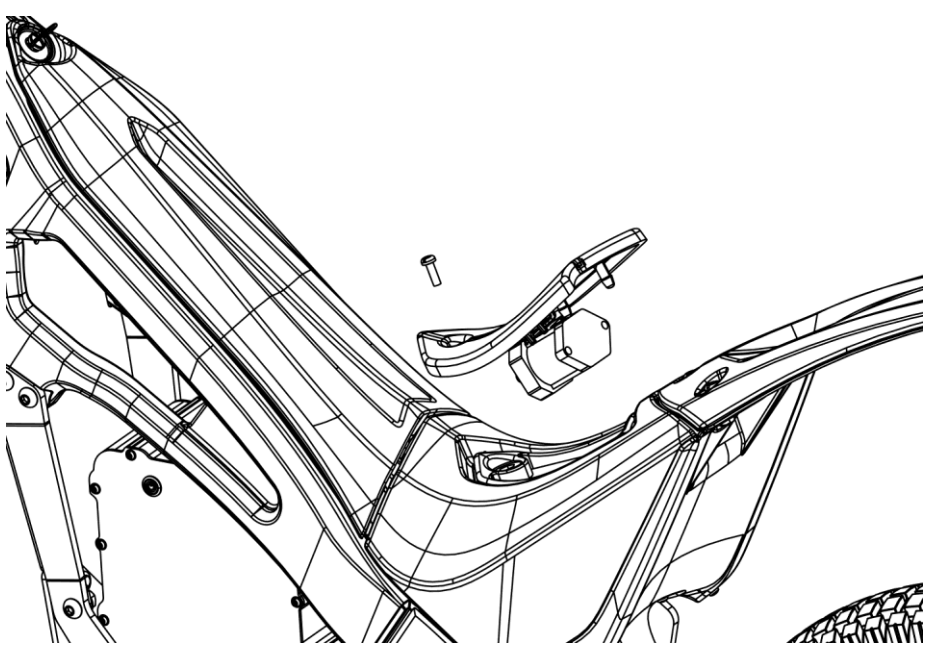

Fig. 30

To close the cover, properly align the pins with their mounting holes and secure them by applying pressure. Finally, reinstall and tighten the Allen screw.

8.18 SWINGARM STOP

To ensure the correct operation of the motorcycle, a swingarm stop has been added to prevent the swingarm from coming into direct contact with other structural components during its range of motion.
This part acts as a movement limiter, absorbing impacts and protecting both the swingarm and nearby elements from potential damage caused by unwanted collisions or interference. This ensures safer, smoother, and more durable performance of the rear suspension system.
This component must not be handled, it must always remain properly tightened.

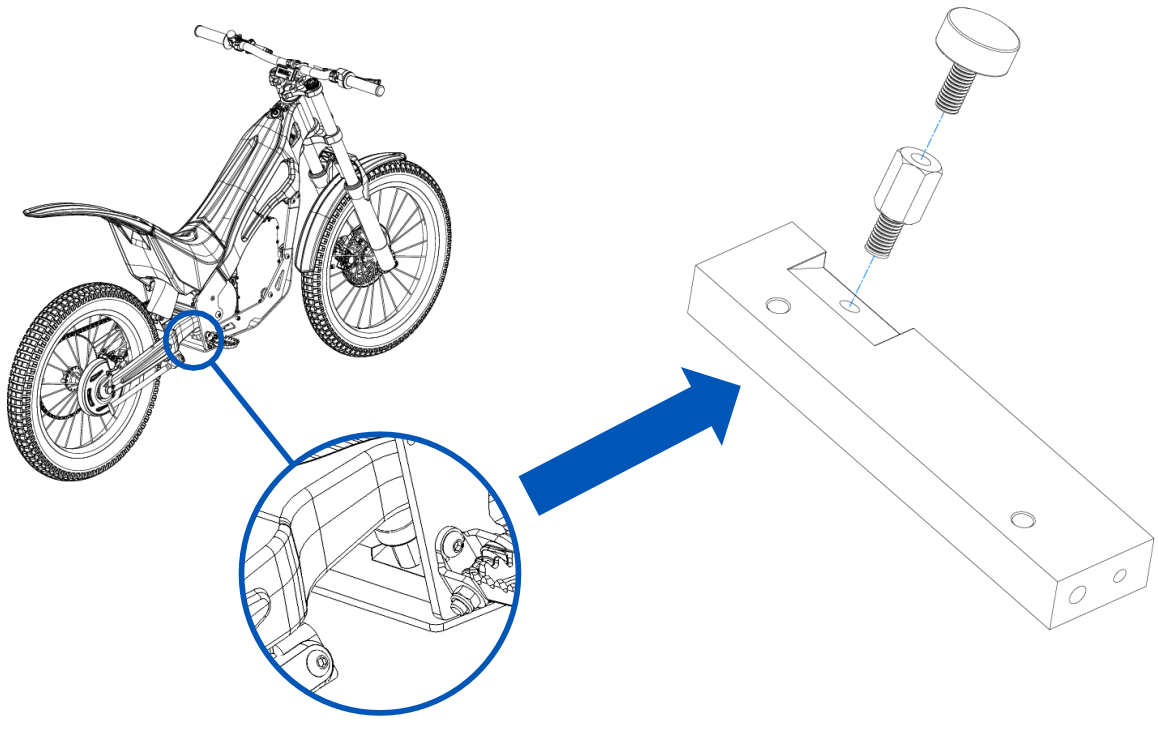

Fig. 31

8.19 CHARGING THE BATTERY

The following components are required to charge the KOUNTRY3 battery:

Battery (Fig. 32).

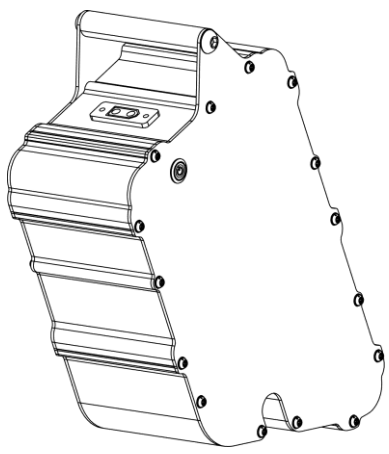

Fig. 32

Charger (Fig. 33).

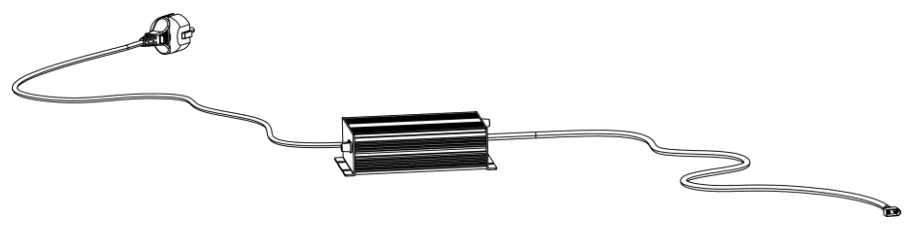

Fig. 33

The following instructions must be followed when using the charger to charge the battery.

NOTICE

FULLY CHARGE THE BATTERY BEFORE USING THE MOTORCYCLE.

1. The charger cable must be plugged into the household mains (Figure 34a). At this point, LED 1 on the charger will be red and LED 2 will be green (Figure 35).
2. Next, connect the charger cable with its two-pin connector to the battery. Correctly position the two-pin plug (Figure 34b) by aligning it with the slot and insert it.

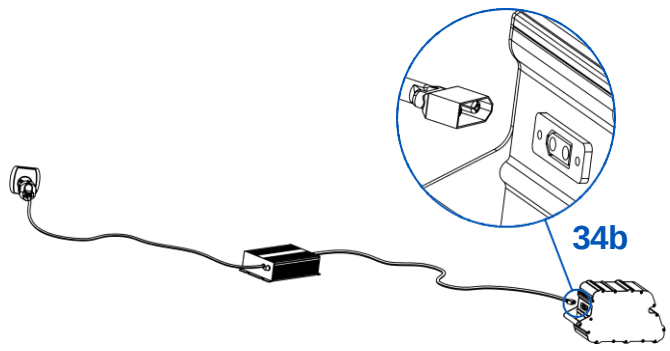

Fig. 34a y 34b

You will notice that both LEDs on the battery charger will be red, which means that the battery is charging correctly.

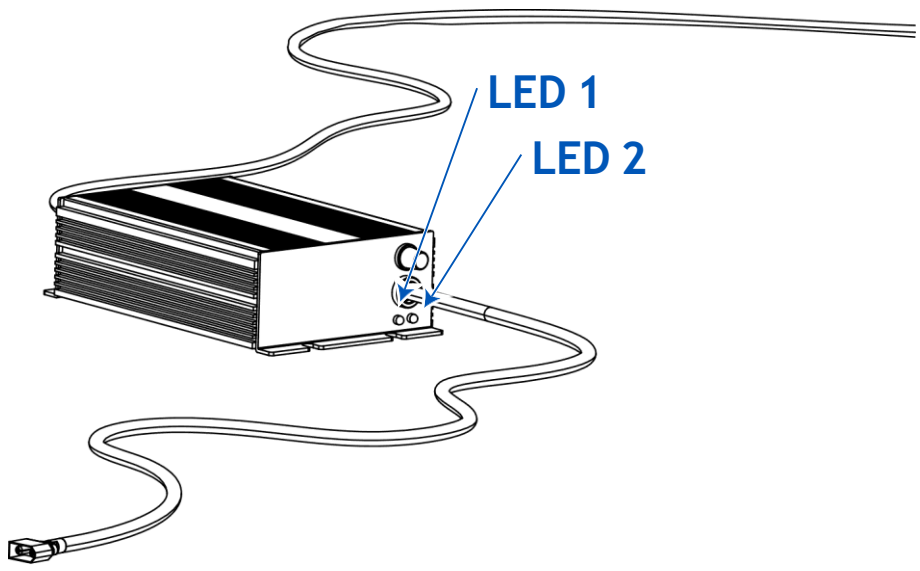

Fig. 35

The battery will be fully charged in approximately 2 hours. You will know that the battery is fully charged when LED 1 on the charger is red and LED 2 is green.

Below is a table indicating the colours of the two LEDs on the battery charger according to the different states:

	LED 1	LED 2
CHARGER ON	●	●
BATTERY CHARGING	●	●
BATTERY CHARGED	●	●

To extend the life of the battery, you should avoid half-charging.

Once the battery is fully charged, you should follow these steps to be able to use the vehicle:

You should disconnect the battery charger, then unplug the charger from the household power outlet and store the battery charger in its corresponding box.

⚠ CAUTION

You should always disconnect the cables by the rigid part of the connectors, you should never disconnect them from the charger by pulling on the cables, or should you connect them with excessive force.
It is forbidden to use any charger that is NOT supplied by the manufacturer.

⚠ WARNING

If signs of deterioration or any type of imperfection are observed in the battery or the charging elements, they must be replaced.

To do this, go to your NEUTRA point of sale or you can contact the official distributor on our website.
You can also write to us at our email and our staff will respond as soon as possible.

One of the most notable advantages of this electric motorcycle is that its battery is very easy to remove and easy to transport. On the other hand, this allows us to have more than one battery to exchange when it runs out. Without the need to wait for the battery to charge, without being able to use the motorcycle.
Follow the instructions below to remove and charge the battery outside the motorcycle:

1- Make sure that the motorcycle is turned off with the button in the “OFF” position. Also make sure that the battery is turned off with the button in the “OFF” position.
NEVER REMOVE THE BATTERY WITH THE MOTORCYCLE ON.
2- Next, turn the quick screw located on the top (Figure 36) half a turn to the left. Remove it without removing it from the upper casing, to remove this component from the frame.

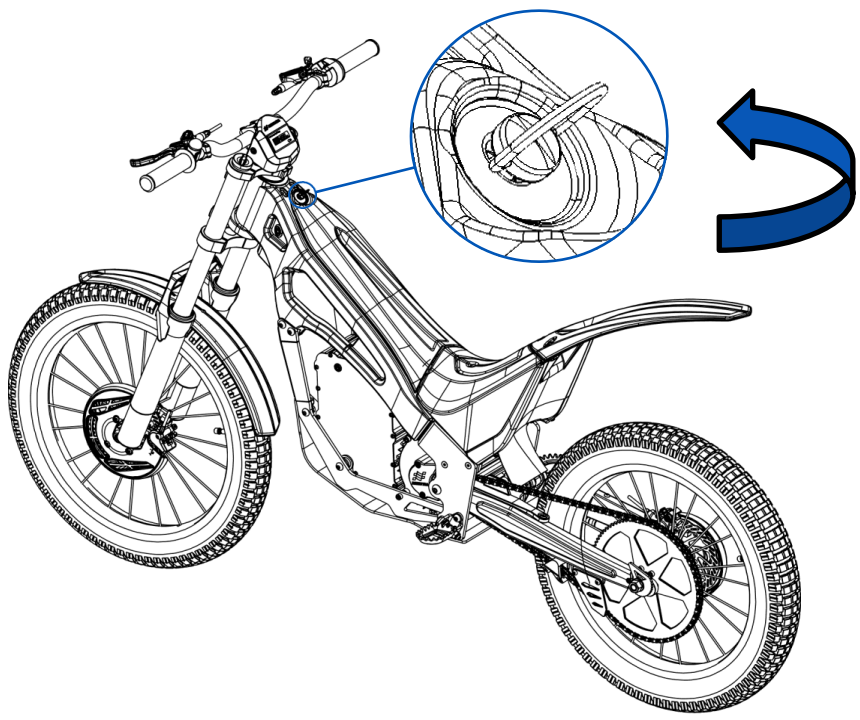

Fig. 36

3- Move the cover forward and then you can remove the upper casing of the motorcycle upwards (Figure 37).

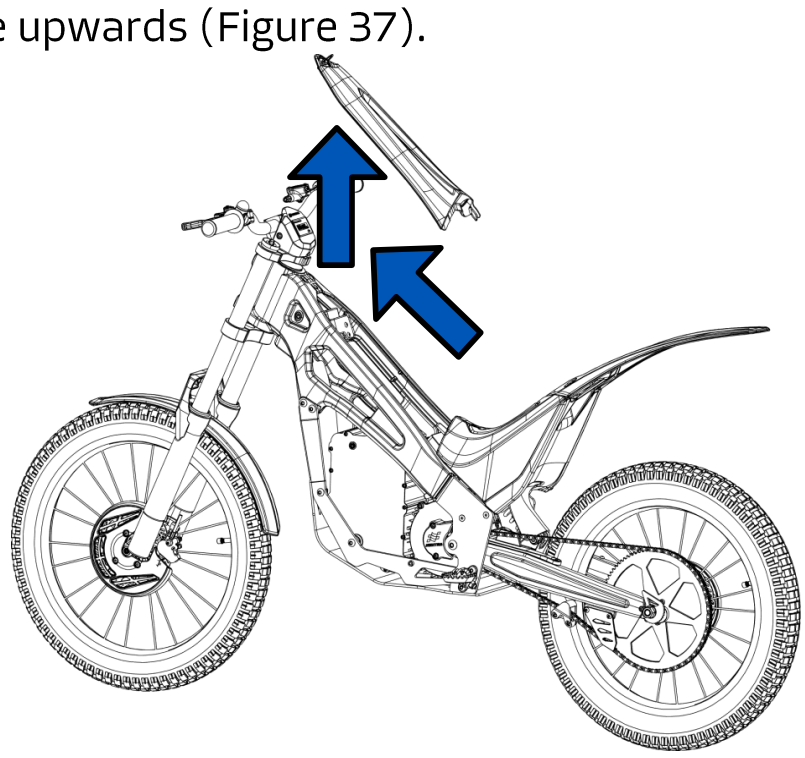

Fig. 37

4- Disconnect the cable that connects the electric motorcycle to the battery (yellow connector, with black cap).

REMEMBER THE IGNITION SWITCH MUST BE IN THE “OFF” position.

5- To remove the battery, first remove the Velcro, the system that fastens the battery to the body.

6- Then remove the battery from the motorcycle (Figure 38).

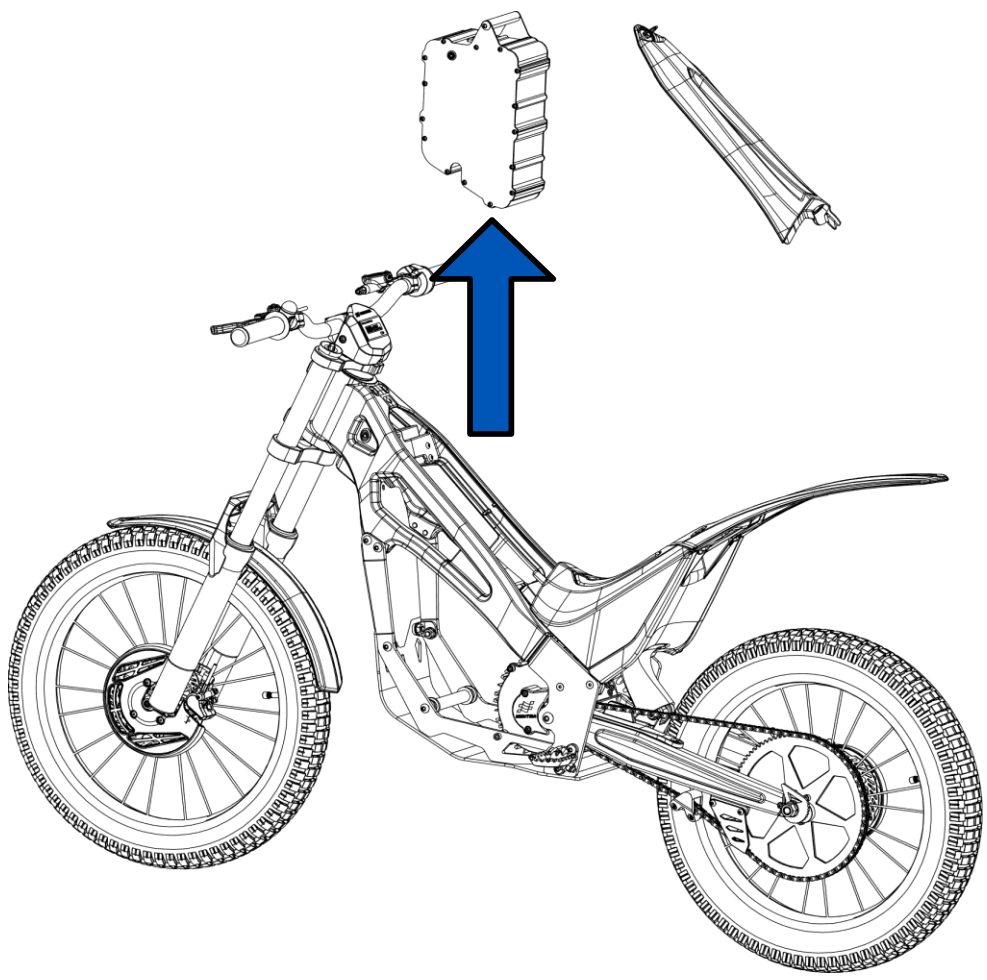

Fig. 38

7- Then plug the charger cable into the domestic mains (Figure 39a). At this point, LED 1 on the charger will be red and LED 2 will be green.

8- Finally, Connect the charger cable with its two-pin connection to the battery. Correctly position the two-pin plug (Figure 39b) by aligning it with the slot and insert it.

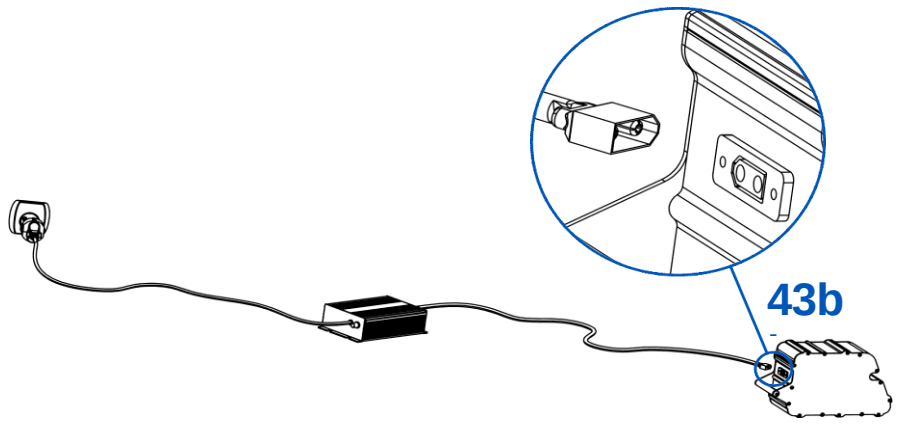

Fig. 39a y 39b

The two LEDs on the battery charger (Figure 40) will be red, this means that the battery is charging correctly.

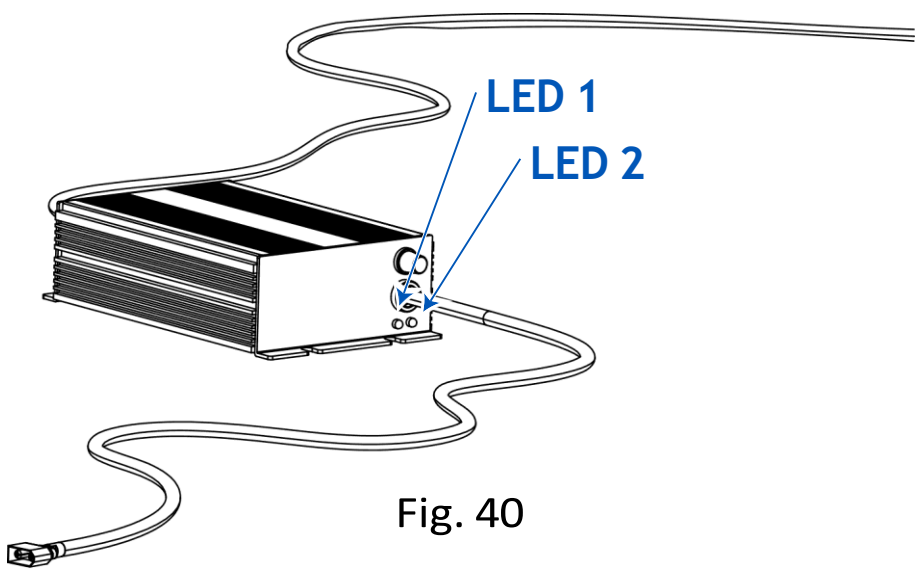

Fig. 40

The battery will be fully charged in approximately 2 hours. You will know that the battery is fully charged when the charger's LED 1 is red and LED 2 is green.

Below is a table indicating the colours of the two LEDs on the battery charger according to the different states:

	LED 1	LED 2
CHARGER ON	🔴	🟢
BATTERY CHARGING	🔴	🔴
BATTERY CHARGED	🔴	🟢

To extend the life of the battery you should avoid half-charging.

Once the battery is fully charged, you should follow these steps to be able to use the vehicle:

Disconnect the battery charger, then unplug the charger from the household power outlet and store the battery charger in its corresponding box.

⚠ CAUTION

Always disconnect the cables by the rigid part of the connectors, you should never disconnect them from the charger by pulling on the cables, nor should you connect them with excessive force.

It is forbidden to use any charger that is NOT supplied by the manufacturer.

⚠ WARNING

If signs of deterioration or any type of imperfection are observed in the battery or the charging elements, these must be replaced.

To do so, go to your NEUTRA point of sale or you can contact the official distributor on our website. You can also write to us at our email and our staff will respond as soon as possible.

Once the battery is fully charged, follow these steps to be able to use the vehicle:

1- Disconnect the battery charger, then unplug the charger from the household power outlet and store the battery charger in its corresponding box.

2- Make sure that the motorcycle is turned off with the button in the “OFF” position.

3- Slide the battery into the interior of the motorcycle (Figure 45). Make sure that the battery socket is correctly positioned with the chassis anchor bar (marked in red in the image).

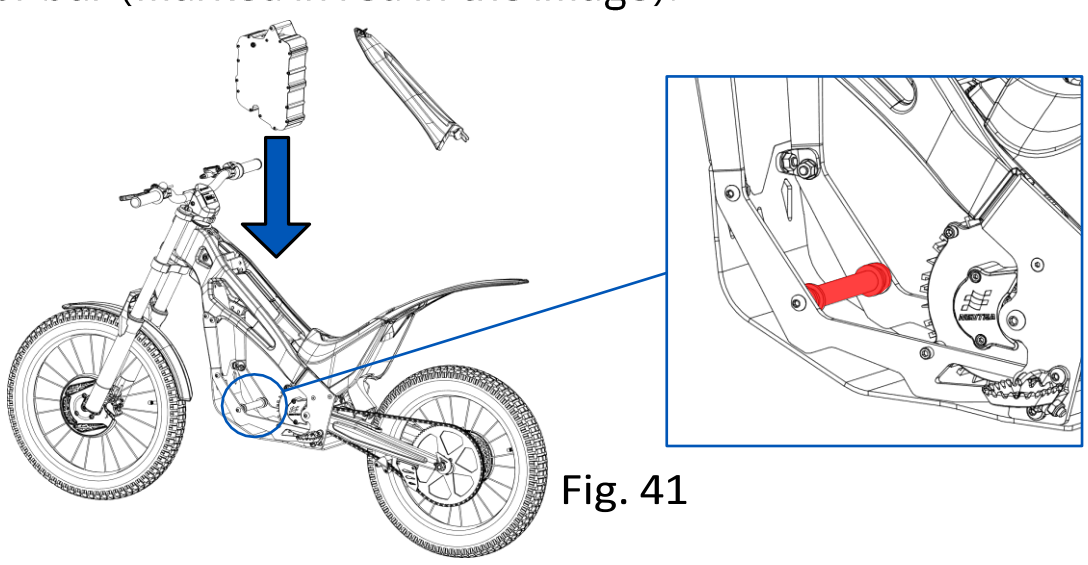

Fig. 41

4- Next, attach the battery to the bodywork using the Velcro system.
5- connect the cables that connect the electric vehicle to the battery (yellow connector, with black cap).
6- Next, attach the upper casing to the frame (Figure 42).

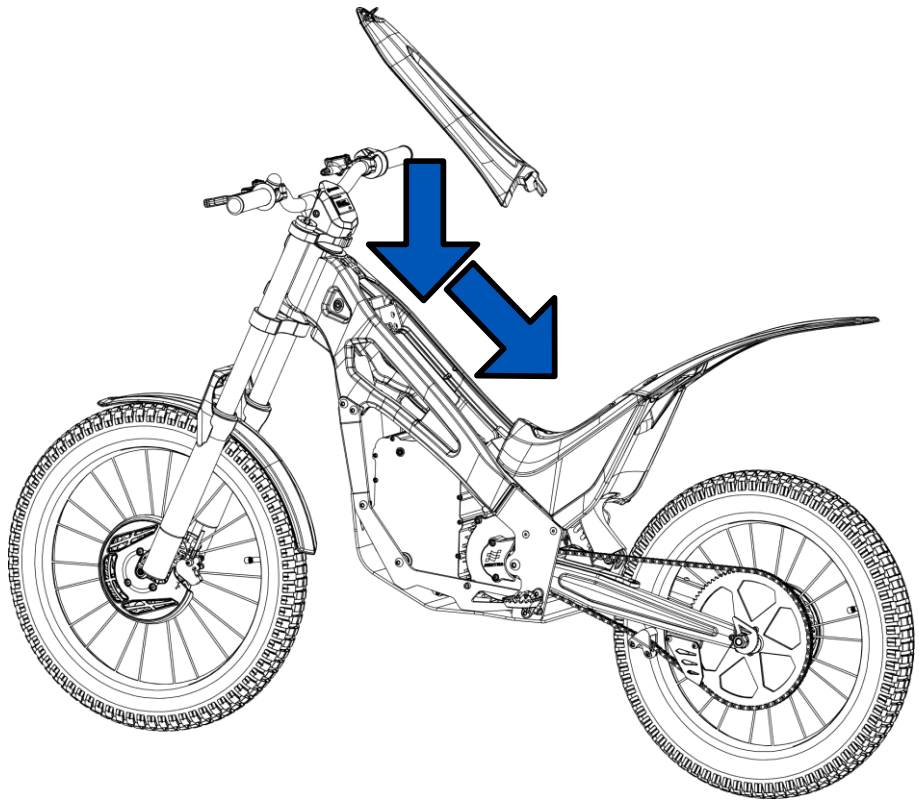

Fig. 42

7- Next, turn the quick-release screw (Figure 43) half a turn to the right and make sure that the upper casing is properly fixed to the frame.

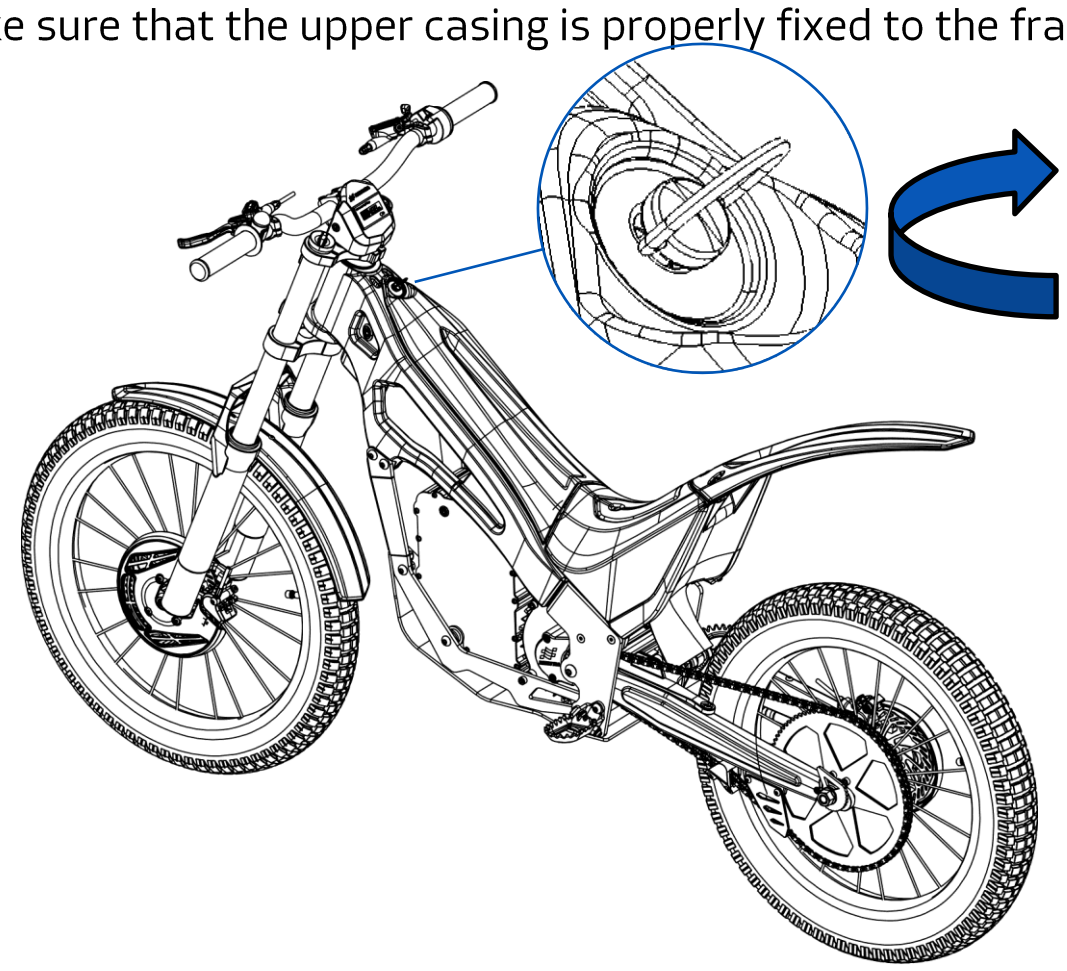

Fig. 43

Follow the following instructions to charge the battery connected to the motorcycle:

1- Make sure that the motorcycle is turned off with the button in the “OFF” position. Also make sure that the battery is turned off with the button in the “OFF” position.
2- Next, turn the quick-release screw located on the top (Figure 36). Remove it without actually removing it from the upper casing, in order to remove this component from the frame.
3- Remove the top cover of the motorcycle (Figure 37).
4- Disconnect the cable that connects the electric vehicle to the battery (yellow connector, with black cap). REMEMBER THE IGNITION SWITCH MUST BE IN THE “OFF” position.
5- Then, plug the charger cable into the domestic mains (Figure 44).

At this point, LED 1 on the charger will be red and LED 2 will be green.

6- Finally, connect the charger cable with its two-pin connector to the battery. Correctly position the two-pin plug (Figure 44b) by aligning it with the slot and insert it (Figure 44).

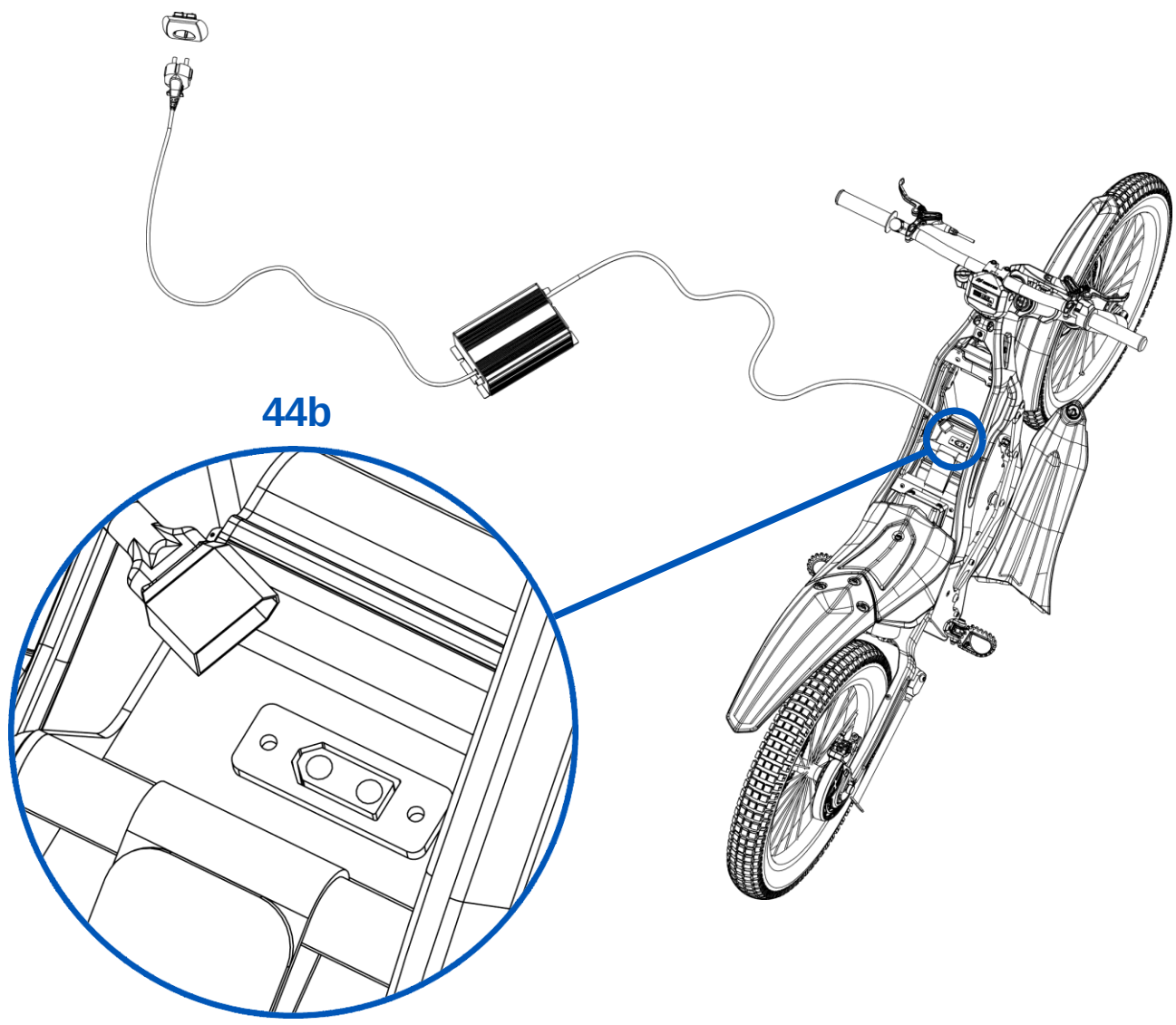

Fig. 44

The two LEDs on the battery charger will be red, this means that the battery is charging correctly.

Full charging of the battery takes approximately two hours. The battery is fully charged when LED 1 on the charger is red and LED 2 is green.
See the colours of the two LEDs on the battery charger according to the different states in the table above on page 33.

CAUTION

Always disconnect the cables by the rigid part of the connectors, never disconnect them from the charger by pulling on the cables,
nor must you connect them with excessive force.
It is forbidden to use any charger that is NOT supplied by the manufacturer.

WARNING

If signs of deterioration or any type of imperfection are observed in the battery or the charging elements, they must be replaced.

For more detailed information on the correct use of the battery and its specifications, refer to the “K3/KOUNTRY3 - 2025 BATTERY MANUAL” found on our website.

To do so, go to your NEUTRA point of sale or you can contact the official distributor on our website. You can also write to us at our email address and our staff will respond as soon as possible.

8.20 SCREW TIGHTENING TORQUES

WARNING

Periodically check the correct fastening and tightening torques of the most important screws on the motorcycle, indicated in the following table.

The tightening torques for these screws are specified below:

ÍTEM	TYPE	REF	ASSEMBLY ELEMENT	QUANTITY	TORQUE (Kgf.m)	SEALING TYPE
M6	DIN 6921	ZB	FRONT SEAT BOX FIXATION	2	1,2	
M6	DIN 6921	ZB	FRONT MUDGUARD FIXATION	1	0,8	
M6	DIN 7991	ZB	SIDE SEAT BOX FIXATION	1	1,2	
M8	DIN 7991	ZB	REAR SHOCK ABSORBER SUPPORT FIXATION TO FRAME	1	2	
M5	DIN 912	ZB	LOWER SEATPOST CLOSING SCREWS	4	0,6	
M5	DIN 912	ZB	UPPER SEATPOST CLOSING SCREWS	3	0,8	
M5	DIN 912	ZN	UPPER SEATPOST FIXATION TO RISER	4	0,6	
M5	DIN 912	ZB	CROWN FIXATION	6	0,6	MEDIUM SEALING
M6	DIN 912	ZN	RISER FIXATION TO HANDLEBAR	4	1	
M6	DIN 912	ZN	REAR BRAKE CALIPER BRIDGE FIXATION	2	1	
M6	DIN 912	ZB	FRONT WHEEL AXLE	2	1,2	
M6	DIN 912	ZB	ENGINE SPROCKET FIXATION	1	1,2	MEDIUM SEALING
M6	DIN 912	ZB	ELECTRONIC BOX SUPPORT FIXATION	1	0,8	
M8	DIN 912	ZB	REAR SHOCK ABSORBER FIXATION	2	2	
M6	DIN 912 / DIN 7991	ZB	ENGINE FIXATION	4/2	1,2	MEDIUM SEALING
M12	SPECIAL	ZB	REAR WHEEL AXLE	1	4,2	
M6	SPECIAL (FLOVED HEAD ALLEN)	ZN	BRAKE CALIPER FIXATION	4	1	MEDIUM SEALING
M8	SPECIAL (CYLINDER HEAD ALLEN)	ZB	FOOT REST FIXATION TO SUPPORT	2	0,4	
M6	SPECIAL (CONICAL HEAD ALLEN)	ZB	STEERING FIXATION	1	0,8	
M10	ISO 7380	ZB	SWINGARM	2	4	
M8	ISO 7380	ZB	FOOT REST FIXATION	4	2	
M8	ISO 7380	ZB	STRAP FIXATION SIDE PANEL	6	2	
M8	ISO 7380	ZB	BATTERY PIN FIXING	2	2	
M8	ISO 7380	ZB	CHAIN TENSIONER FIXING	1	1,8	MEDIUM SEALING
M5	ISO 7380 (TORX)	ZN	BRAKE PUMP FIXING	4	0,6	
M5	ISO 7380 (TORX)	ZN	FRONT/REAR BRAKE DISC FIXING	12	0,5	MEDIUM SEALING
M8	ISO 7380 / DIN 7991	ZB	SKID PLATE FIXING	2/2	2	
M4	ISO 7380 FL	ZB	REAR CONTROLLER FIXING	2	0,3	
M5	ISO 7380 FL	ZB	FRONT BRAKE HOSE BRIDGE FIXING	1	0,25	
M5	ISO 7380 FL	ZB	REAR BRAKE HOSE BRIDGE FIXING	1	0,25	
M5	ISO 7380 FL	ZB	CHAIN SKI FIXING	2	0,25	MEDIUM SEALING
M5	ISO 7380 FL	ZB	FRONT CONTROLLER FIXING	1	0,5	
M5	POELIER ALLEN	ZB	SEAT BOX LID FIXING	1	0,4	
M6	POELIER ALLEN	ZB	REAR MUDGUARD FIXING	3	0,8	

8.21 K3 TECHNICAL SPECIFICATIONS

COMPONENT	FEATURES					
FRONT TIRE	2,5 x 20”					
FRONT TIRE PRESSURE	0,6-0,8 kgf/cm^2					
REAR TIRE	3,0 x 20”					
REART TIRE PRESSURE	0,6-0,8 kgf/cm^2					
FRONT SUSPENSION	32 mm fork / 125 mm travel. Aluminium					
REAR SUPENSION	DNM 90 mm					
PINION	Z11					
CHAIN	219SH-G2					
SPROCKET	Z90					
FRONT BRAKE	Hydraulic disc brake with dual-piston caliper					
FRONT BRAKE DISC	Ø 160mm			Service limit: 2.0 mm		
REAR BRAKE	Hydraulic disc brake with dual-piston caliper					
REAR BRAKE DISC	Ø 140 mm			Service limit: 2.0 mm		
BRAKE PADS	Service limit: 0,5 mm					
BRAKE FLUID	Mineral					
RIMS	20'' with reinforced 2.3 mm spokes					
ENGINE	Electrical brushless 2,8 kw					
CONTROLLER	48V / 130 A					
CONTROLLER MAPS	5 pre-set maps combining speed, power and throttle response					
THROTTLE TYPE	Mechanical cable					
FRAME	Aluminium					
SWINGARM	Aluminium					
PLASTICS	Flexible polypropylene pp					
TYPE OF CHARGE	Electricity					
BATTERY	Removable	Li-ion	50,4 V	16,8 Ah	847Wh	12S 4P
CHARGER	51V		5 A / 10 A		1-2 hours full charge aprox.	
MAXIMUM DRIVER WEIGHT	35kg					
BATTERY WEIGHT	4,6kg					
WEIGHT	33kg					
WHEELBASE	1107mm					
TOTAL LENGHT	1636mm					
MAX. HEIGHT	940 mm					
HANDLEBAR WIDTH	650 mm					
SEAT HEIGHT	552 mm					

8.22 MOTORCYCLE COMPONENTS CHART

COMPONENT	INSPECT/ADJUST	SUBSTITUTE	NOTE
TIRES	Every Ride/ Race	Check wear	Check tire pressure
RIMS	Every Ride/ Race	Check wear	Check spokes Tork
RIM BEARINGS	Every Ride/ Race	40 hours	Perform by specialist
TRANSMISSION SYSTEM	Every Ride/ Race LUBRICATE	8 hours	Perform by specialist
PROTECTORS: TRANSMISSION/BRAKES	Every Ride/ Race	Breakage	-
THROTTLE-CABLE GRIP SYSTEM	Every Ride/ Race LUBRICATE	Breakageor barewire	ubricate, tighten throttle tube
ACCELERATION SYSTEM	Every Ride/ Race	Breakage	Perform by specialist
BRAKING SYSTEM	Every Ride/ Race	Check wear, max every 3 hours of use	Remember, minimum pad thickness 0.5 mm
BRAKE FLUID	Every Ride/ Race	25 hours/ annually	Perform by specialist
STEERING	Every Ride/ Race	30 hours	Perform by specialist
SUSPENSION	Every Ride/ Race	Breakage/ loss of performance	Check fork pressure, possible oil loss. Replace oil every 40 hours.
REAR SUSPENSION	Every Ride/ Race LUBRICATE (AFTER 10 hours of use)	Breakage/ loss of performance	Check rear spring, possible oil loss. Replace oil every 10 hours.
MAP SELECTOR	Every Ride/ Race	Breakage/ poor contact	Perform by specialist
MAN OVERBOARD	Every Ride/ Race	Breakage/ poor contact	Perform by specialist
ON/OFF BUTTON	Every Ride/ Race	Breakage/ poor contact	Perform by specialist
ENGINE	After 300 hours of use	-	Perform by specialist
FRAME	Each 5 hours or fall	Breakage	Perform by specialist
BATTERY/WIRING	Every Ride/ Race	-	Perform by specialist
PLASTICS	Every Ride/ Race	Breakage	-
DRAIN SEAT BOX	Every Ride/ Race Wash	-	Open for possible emptying
SWING ARM BEARINGS	Every Ride/ Race LUBRICATE (AFTER 10 hours of use)	60 hours	Grease bearings every 20 hours
SWINGARM	Each 5 hours or fall	Breakage	Perform by specialist
GENERIC TIGHTENING TORQUE	Every Ride/ Race	-	Handlebars/ Levers Axles Wheels/ Protectors/ Footpegs
FRAME/ENGINE TIGHTENING TORQUE	Every Ride/ Race	-	After each race, perform thorough maintenance
FRONT SUSPENSION SEAL	-	40 hours / annually	Replace the component if any signs of oil or/and air leakage are detected
CHAIN SLIDER/ CHAIN TENSIONER	Every Ride/ Race	40 hours	Replace the component if it is found to be affected or damaged

A clean motorcycle helps to identify possible anomalies.

WARNING

Because it is a racing vehicle, wear and tear is always subject to the rider's driving. This table gives guidelines for normal driving.
In the event of a fall, inspect all damaged parts.

9 SPARE PARTS

This product has been specifically designed to facilitate the assembly of spare parts and their recyclability, thus reducing the impact on the environment and improving customer service.
To see all the motorcycle components and possible spare parts, go to the "MANUAL DE DESPIECE - PARTS BOOK - NEUTRA K3 2025" catalogue in our website.

⚠ WARNING

Always use original K3 spare parts.

10 TROUBLESHOOTING

If the motorcycle does not work, these may be the most common and easy to detect faults:
1- Check that the ignition switch, located on the left side of the upper part of the chassis, is on.
2- Check that the man overboard is connected correctly.
3- Check that the battery contains a minimum charge for the motorcycle to work. If the battery is not charged, check that its charge or discharge connector is not damaged.
4- The battery is charged correctly and the connectors mentioned above are not damaged. C check that the battery is correctly connected to the rest of the motorcycle through the battery discharge connectors.
5- Check that the green LED on the controller is on. If the LED is in the state mentioned, the controller is working correctly.
6- Check if the red LED on the controller is on, this means that the controller has entered the "sleep time" state. In this case you should disconnect the con-tact switch and reconnect it.
7- Check if the red LED on the controller is on, this means:
- That the battery has entered the "sleep time" state. In this case you should disconnect the contact switch and reconnect it.
- In case the red LED is still on or flashing, you should check the ERROR CODE table.

LED CODE		ERROR	DETAILS
1,4	● ●●●●	Over Temperature Warning	The controller temperature exceeds 90°C. The current will be limited. Reduce the load on the controller or turn it off until it cools down. Clean the heat sink.
2,3	●● ●●●	Temperature Overload	The controller temperature has exceeded 100°C. The controller will stop, but will restart when the temperature drops below 80°C.
2,4	●● ●●●●	Throttle Error on Power Up	The throttle signal is higher than the preset "dead zone" at power up. The error is cleared when the throttle is released. If the error persists, mechanically adjust the "dead zone" via the throttle cable.
3,2	●●● ●●	Internal Reset	This may be caused by a transient fault condition, such as a temporary over current or momentarily high or low battery voltage. This can occur during normal operation. It is just a warning light; will not prevent continued use of the vehicle.
4,3	●●●● ●●●	Engine overheating	The engine temperature has exceeded the set maximum limit. The controller will shut down until the engine temperature cools down.

Correct interpretation of red LED warning lights:
For example, "1, 2" indicates that the red LED flashes once, then after a one second pause, flashes twice. The pause time between different groups of flash codes is two seconds.

In case the motorcycle still does not work, please go to your nearest NEUTRA dealer or you can contact the official distributor on our website. You can also write to us at our email and our staff will reply as soon as possible.

11 OPERATING MODE IN CASE OF ACCIDENT

11.1. INITIAL SAFETY VERIFICATION

1- Stop the vehicle immediately:

Turn off the motorcycle's ignition switch to prevent any unexpected movement.

Ensure that the child is away from the vehicle in case of potential electrical or mechanical failures.

2- Evaluate the child's condition:

Check for visible injuries such as bruises, cuts, or fractures.

If there are signs of serious injuries (immobility, difficulty breathing, or bleeding), call emergency services immediately.

3- Check the surroundings:

Ensure that there are no other moving vehicles or people that could increase the risk.

If safe, move the child and the motorcycle to a secure location away from the road or impact zone.

11.2. ACTION IN CASE OF MILD INJURIES

1- Cuts or scrapes:

Clean the wound with clean water and apply a bandage. Consult a doctor if necessary.

2- Mild blows:

Apply ice wrapped in a clean cloth to reduce inflammation.

3- Emotional state assessment:

Calm the child, making sure he or she feels safe and accompanied.

11.3. VEHICLE INSPECTION

1- Check the electric children's motorcycle:

Check for possible structural or mechanical damage.

Make sure the electrical system is turned off to avoid risk of short circuit.

11.4. POST-ACCIDENT PREVENTION

1- Safety equipment verification:

Make sure the child's helmet and protections are in good condition before riding the motorcycle again.

2- Periodic inspection of the motorcycle:

Carry out regular maintenance, see section “8.22 MOTORCYCLE COMPONENTS CHART”.

12 AIRBORNE NOISE EMISSION

The airborne noise emitted by our electric children's motorcycle is the sound generated by the vehicle's movement, including the electric motor, transmission, wheels, and their interaction with the air and the environment during operation.
The airborne noise level emitted by the NEUTRA KOUNTRY3 electric motorcycle is below 60 decibels (dB), equivalent to a normal conversation.
To reduce the airborne noise emitted by the electric motorcycle, it is recommended to perform regular maintenance on mechanical and electrical components and ensure that all structural elements are properly adjusted to avoid vibrations.

13 WARRANTY

NEUTRA undertakes to guarantee the original purchaser (consumer) that the motorcycle has been manufactured by NEUTRA and that both the materials and the manufacturing process are free of defects, in accordance with the conditions and terms that you can consult on the NEUTRA website. If there are different legal requirements in the country or by the importer/distributor where the motorcycle was purchased, they will be responsible for complying with the corresponding warranty terms and conditions.

We recommend that you first contact your distributor to obtain specific details about warranty policies and to file a claim if necessary. NEUTRA's warranty is limited to the repair or replacement of defective components and/or the entire motorcycle, always at NEUTRA's discretion.

It is important to mention that NEUTRA will not be liable for indirect or consequential losses, or damage to persons, animals or property, or other expenses related to its products. Warranty claims for defects or faults that have not been reported to an authorized NEUTRA dealer before the end of the warranty period, or that do not comply with the terms of NEUTRA's warranty (including, but not limited to: registration; claim procedure; transportation costs; wear and tear; consumables; inspection, maintenance and repair; modification or alteration; commercial use; and drops, crashes or other incidents) will be excluded.

If the motorcycle is defective, it must be returned to NEUTRA so that a replacement part can be issued under warranty, unless otherwise authorized by NEUTRA. NEUTRA reserves the right to decide whether to repair or replace any part it considers defective. When replacing parts, ownership of the removed parts will become NEUTRA's without any further consideration.

As the vehicle is intended for competition and sporting use, the warranty is limited due to the operating conditions and the stresses to which its components are subjected. Wear resulting from use, damage caused by improper use, accidents, unauthorised modifications, and failure to carry out maintenance in accordance with the manufacturer's instructions may be excluded from warranty coverage.

14 INFORMATION

Complete manufacturer and technical service details:

Brand: NEUTRA

Manufacturer: FACTORY MADE S.L.

Address: C/ Salvador Seguí 22, 08750, Molins de Rei (Spain)

15 ACKNOWLEDGEMENTS

By choosing the K3 product you become part of the great NEUTRA community. We welcome you and hope it will be an amazing journey.

Thank you for your trust in NEUTRA.